TEKNIX

USER'S OPERATION MANUAL

TK5W914HW

Before operating this unit, please read this manual thoroughly, and retain for future reference

This washing machine is intended solely for household use.
Please do not use it for any laundry labelled as not suitable for machine washing.

The following symbols are used throughout the manual and they have the following meanings:

Information, advice, tip, or recommendation

Warning – general danger

Warning – danger of electric shock

Warning – danger of hot surface

Warning – danger of fire

It is important that you carefully read the instructions.

CONTENTS

INTRODUCTION

4 SAFETY PRECAUTIONS

10 WASHING MACHINE DESCRIPTION
11 Technical specifications

PREPARING THE WASHING MACHINE BEFORE FIRST USE

12 INSTALLATION AND CONNECTION
13 Removing the blocking screws / rods
14 Moving and transport after installation
15 Selecting the room
15 Adjusting the washing machine feet
17 Connecting to water supply
17 Aqua stop
18 Connecting and securing the water discharge hose
20 Connecting the appliance to the power mains

21 BEFORE USING THE APPLIANCE FOR THE FIRST TIME

STEPS OF THE WASHING PROCESS

22 WASHING PROCESS, STEP BY STEP (1–6)
22 Step 1: Heed the labels on the laundry
23 Step 2: Preparing the washing process
27 Step 3: Choosing the washing programme
31 Step 4: Selecting additional settings and functions
36 Step 5: Starting the washing programme
37 Step 6: End of the washing programme

38 INTERRUPTIONS AND CHANGING THE PROGRAMME

WASHING MACHINE CLEANING AND MAINTENANCE

40 MAINTENANCE & CLEANING
40 Cleaning the detergent compartment
41 Cleaning the water supply hose, detergent dispenser housing, and rubber door gasket
42 Cleaning the pump filter
43 Cleaning the washing machine exterior

TROUBLE-SHOOTING

44 TROUBLESHOOTING
44 What to do ...?
45 Troubleshooting and error table
46 Servicing

MISCELLANE-OUS

47 RECOMMENDATIONS FOR WASHING AND ECONOMIC USE YOUR WASHING MACHINE
48 Stain removal tips
50 DISPOSAL
51 TYPICAL CONSUMPTION TABLE

SAFETY PRECAUTIONS

Carefully read the instructions for use before using the washing machine.

These instructions for use of a washing machine are supplied with different types or models of washing machines. Therefore, they may include descriptions of settings or equipment that are not available in your washing machine.

Failure to observe the instructions for use or inappropriate use of the washing machine may result in damage to the laundry or the appliance, or injury to the user. Keep the instruction manual handy, near the washing machine.

This appliance is intended for domestic use only.
If the washing machine is used for professional, for-profit purpose or purpose exceeding normal use in a household, or if the washing machine is used by a person who is not a consumer, the warranty period shall be equal to the shortest warranty period required by relevant legislation.

Follow the instructions for correct installation of the washing machine and connection to the water and power mains (see chapter »INSTALLATION AND CONNECTION«). Connection to water and power supply has to be executed by an adequately trained technician or expert.

Any repair and maintenance pertaining to safety or performance should be done by trained experts.
To avoid danger, **a damaged power** cord may only be replaced by the manufacturer, a service technician, or an authorised person.

Before connecting the washing machine to the power mains, wait for at least 2 hours until it reaches room temperature.
This product must be serviced by an authorized Service Center, only use approved spare parts by authorized manufacturers.
Under no circumstances should you attempt to repair the appliance yourself. Repairs carried out by inexperienced persons may cause injury or more serious malfunctioning. Refer to your local Service Center, and always insist on genuine spare parts.

In case of incorrect washing machine connection, incorrect use, or servicing by an unauthorized person, the user shall bear the cost of any damage as such damage shall not be covered by warranty.

The washing machine may not be connected to the power mains using an extension cord.
Do not connect the washing machine to power mains using an external switching device such as a programme timer, or connect it to power mains that is regularly switched on and off by the power supply provider.

Do not connect the washing machine to an electrical outlet intended for an electric shaver or hair dryer.

The power socket has to be safely earthed, and the water supply should be unimpeded.

Do not install the washing machine in a room where the temperature can drop to below 5°C, as washing machine parts may be damaged in case of water freezing.

Place the washing machine on a level and stable solid (concrete) base.

If the washing machine is placed on an elevated stable base, the washing machine has to be additionally secured against tipping.

Before the first use of the washing machine, remove the transit bolts, as switching on a blocked washing machine can result in serious damage (see chapter »INSTALLATION AND CONNECTION/Removing the transit bolts«). Warranty shall be void in cases of such damage.

To connect the washing machine to water supply, make sure to use the supplied water supply hose and gaskets. Water pressure has to be between 0.1–1 MPa (1-10 bar; 1–10 kp/cm^2; 10–100 N/cm^2).

Always use a new water supply hose to connect the washing machine to water supply; do not reuse an old water supply hose.

The end of the water discharge hose should reach into a water drain line.

Before the start of the washing cycle, press the door on the indicated spot until it locks into place. The door cannot be opened during washing machine operation.

We recommend removing any impurities from the washing machine drum before the first wash using the Drum clean programme (see PROGRAMME TABLE).

After the washing cycle, close the water tap and pull out the washing machine plug from the power socket.

Only use the washing machine for washing laundry, as described in the instruction manual. The machine is not intended for dry cleaning.

Only use agents for machine washing and care of laundry. We shall not be responsible for any damages or discolouration of gaskets and plastic parts resulting from incorrect use of bleaching or colouring agents.

When descaling, only use descaling agents with added anti-corrosion protection. (Only use non-corrosive descaling agents.) Follow the manufacturer's instructions. Finish the descaling process with several rinse cycles or by running the Drum clean (Self-cleaning programme) in order to remove any residual acid (e.g. vinegar etc.).

⚠ Do not use detergents that contain solvents as this could lead to release of poisonous gases, damage to the washing machine, and risk of fire and explosion.

The washing machine is not intended for use by persons (including children) with physical or mental impairments, or persons with lacking experience and knowledge. These persons should be instructed about the use of the washing machine by a person responsible for their safety.

The warranty does not cover consumables, minor deviations in colour, increased noise that results from appliance age and which does not affect the functionality of the appliance, and aesthetic defects on components, which do not affect the functionality and safety of the appliance.

CHILD SAFETY

Before closing the washing machine door and running the programme, make sure there is nothing except laundry in the drum (e.g. if a child climbed into the washing machine drum and closed the door from the inside).

Keep the detergent and conditioner out of reach of children.

Activate the child lock. See chapter »CHOOSING THE SETTINGS/Child lock«.

Do not let children younger than three years come near the appliance, unless they are under constant supervision.

The washing machine is made in compliance with all relevant safety standards.

This washing machine may be used by children aged 8 years and above and by persons with reduced physical, sensory or mental capabilities or lack of experience and knowledge, but only if they are supervised during the use of

the washing machine, if they have been provided relevant instructions regarding safe use of the washing machine, and if they understand the hazards of inappropriate use. Make sure children do not play with the appliance. Children may not clean the washing machine or perform any maintenance tasks without supervision.

DANGER OF HOT SURFACE ⚠

At higher washing temperatures, the door glass will heat up. Be careful to avoid burns. Make sure children do not play near the door glass.

WATER OVERFLOW PROTECTION (WITH WASHING MACHINE SWITCHED ON) ⚠

If the water level in the appliance rises above normal level, then the excess water level protection will be activated. It will shut off the water supply and start pumping out the water. The program is interrupted and an error is reported.

TRANSPORT/TRANSPORT AFTER INSTALLATION

If you intend to move the washing machine after it has been installed, then it should be blocked by inserting at least one transit bolt (see chapter »INSTALLATION AND CONNECTION/Moving and transport«). Before inserting the transit bolts, disconnect the washing machine from the power mains!

If the supply cord is damaged, it must be replaced by the manufacturer, its service agent or similarly qualified persons in order to avoid a hazard.

WASHING MACHINE DESCRIPTION

FRONT

1 Control unit
2 Programme selector knob
3 Detergent compartment
4 Door
5 Rating plate
6 Pump filter cover

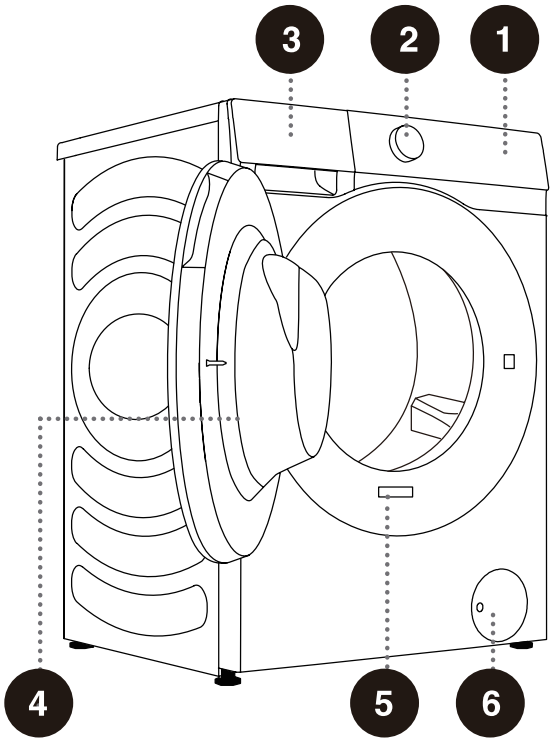

BACK

1 Water supply hose
2 Power cord
3 Water discharge hose
4 Adjustable feet
5 Blocking rods/screws

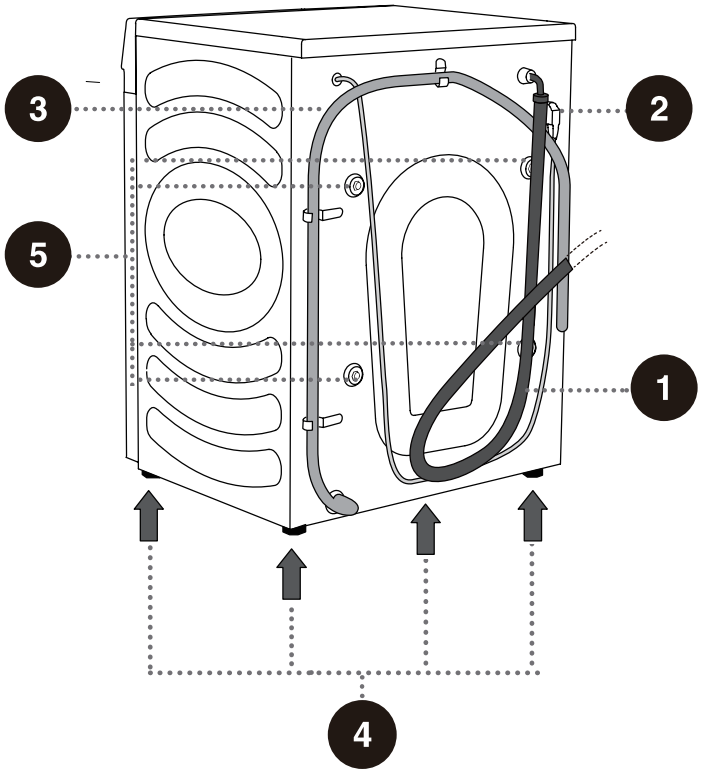

The illustrations in this manual are for reference purpose only. As our products are subject to continual improvement, the appearance, color and functional parts of your actual product may vary from the illustrations.

TECHNICAL SPECIFICATIONS

(DEPENDING ON THE MODEL)

Rating plate with basic information about the washing machine is fitted on the front wall of the washing machine door opening (see chapter »WASHING MACHINE DESCRIPTION«).

Maximum load	9 kg
Washing machine weight	63 kg
Rated Voltage	220-240V~
Rated power	1650W
Frequency	50Hz

Dimensions(mm)

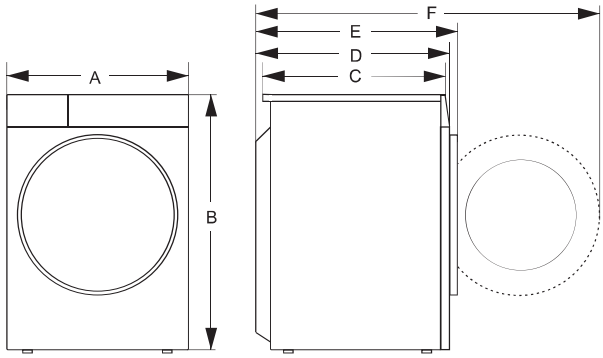

Index	Dimension(mm)
A	595
B	845
C	500
D	550
E	590
F	1060

INSTALLATION AND CONNECTION

Remove all packaging. When removing the packaging, make sure not to damage the appliance with a sharp object. Keep the packaging material (plastic bags, other plastic parts etc.) out of reach of children.

Check for any damage on the appliance. If you suspect the appliance is damaged, do not use it and immediately contact the service unit.

The appliance is supplied with a support set that includes:

- Instructions for use;
- 4 plastic plugs;
- Supply hose;
- Drain hose holder;
- Wrench;
- Noise reduction board（only with some models）.

Make sure all of the above is supplied.

HOW TO INSTALL THE NOISE REDUCTION BOARD

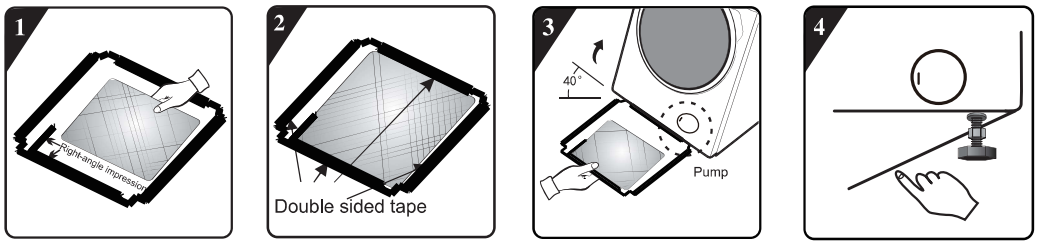

1 Before installing the noise reduction board, align and paste the acoustic absorption wool with and along the right-angle impression on the noise reduction board (this procedure is unnecessary for some of the models without acoustic absorption wool).

2 Remove surface paper on double sided tape at four sides of the bottom plate.

3 Incline the machine to an angle of 40° and let the side with right-angle notch face towards front of the appliance, as shown in the figure. Insert the side with oblique-angle notch between two foot screws at back of the appliance completely in place. Then, install the noise reduction board and ensure that it contacts with bottom of the appliance closely.

4 Press the double sided tape on four sides manually to secure the noise reduction board to the machine body firmly.

REMOVING THE TRANSIT SCREWS/BOLTS

⚠ Before the first use of the appliance, transport screws/rods must be removed. A blocked appliance may be damaged when it is switched on for the first time. Warranty shall be void in cases of such damage.

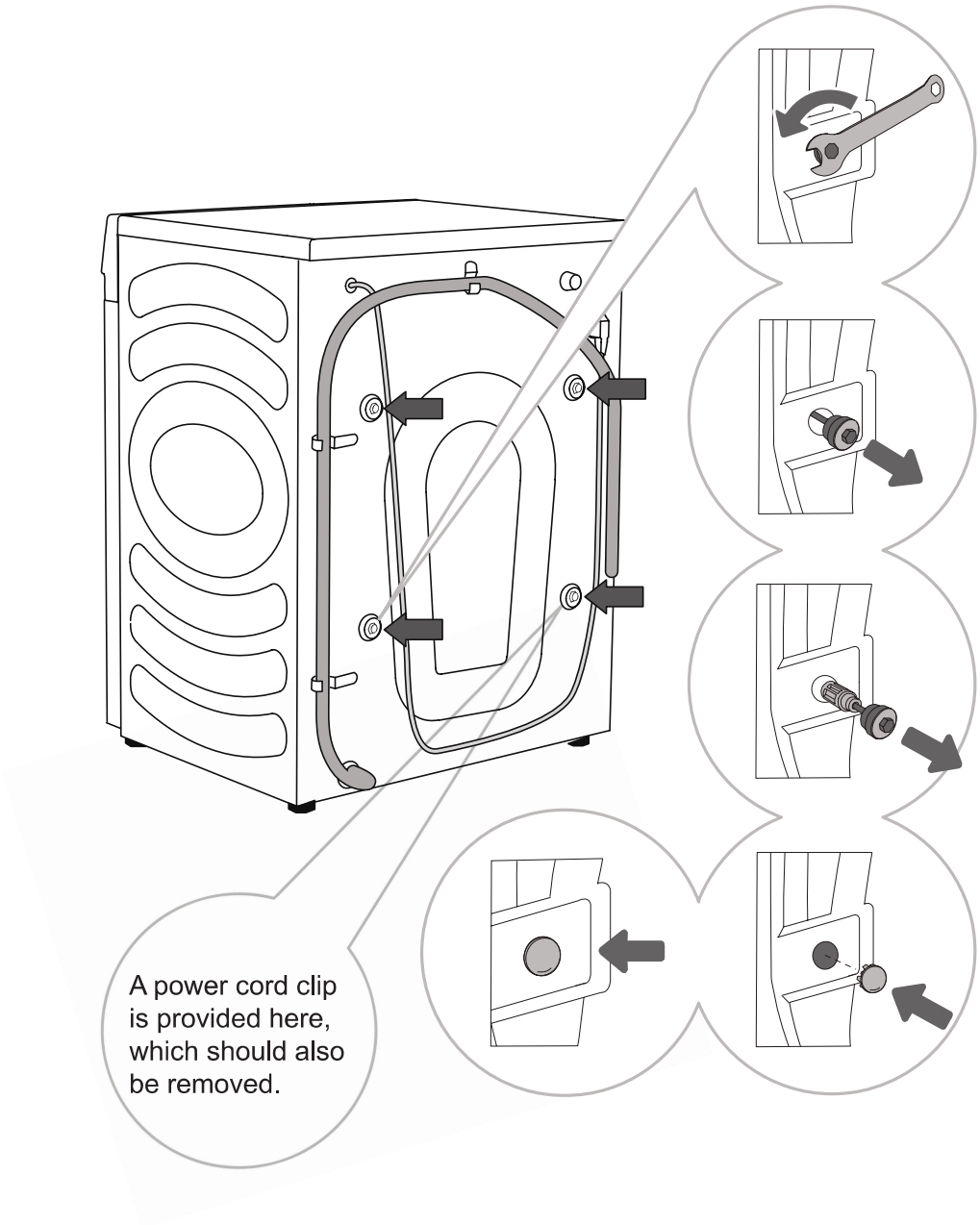

1 Move aside the hoses and use a fitting spanner to undo the 4 screws on the back of the appliance by turning them counter clockwise, as indicated by the arrow. Undo them by approximately 30 mm.

2 Pull all 4 transport screws/rods horizontally.

3 Pull out the transport screws/rods complete with the rubber and the plastic part.

4 Cover the four holes through which the transit screws/bolts were inserted with plastic plugs. The plastic plugs are supplied in the bag with the washing machine instruction manual (the support set).

Save the transport screws/rods in case you have to transport the appliance again later (to reinstall the transit screws/bolts, follow the above procedure in reverse order).

MOVING AND TRANSPORT AFTER INSTALLATION

If you wish to move the washing machine after it has been installed, the transit screws/bolts have to be re-installed to prevent vibration damage to the washing machine during transport (see chapter» INSTALLATION AND CONNECTION/Removing the transit screws/bolts«). If you lost the transit screws/bolts, they can be ordered from the manufacturer.

Pack all the packaging material (plastic bags, other plastic parts etc.).

After transport, the washing machine should be left to stand still for at least two hours before it is connected to the power mains, so that it can reach room temperature. The appliance should be installed and connected by a trained technician.

Carefully read the instructions for use before connecting the washing machine. Repair or any warranty claim resulting from incorrect connection or use of the washing machine shall not be covered by the warranty.

SELECTING THE ROOM

The washing machine must stand level and stable on a solid ground. Ground on which the washing machine is placed must have a concrete base. It should be clean and dry; otherwise, the washing machine may slide. Also, clean the bottom surface of adjustable feet.

ADJUSTING THE WASHING MACHINE FEET

Use a spirit level and the supplied spanner.

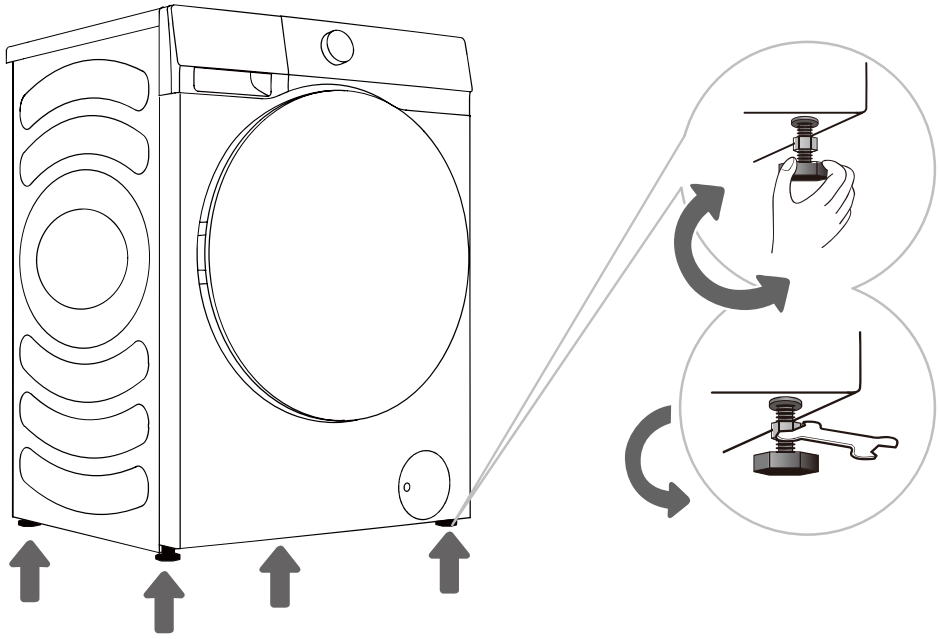

1 Rotate the adjustable feet to level the washing machine lengthwise and crosswise. The feet allow levelling by +/- 2 cm.

2 After adjusting the height of the feet, firmly tighten the jam nuts (counter nuts) using the supplied spanner by turning them towards the bottom of the washing machine ⬆ (see figure).

Incorrect levelling of the washing machine with the adjustable legs may cause vibration, appliance sliding across the room, and loud operation. Incorrect levelling of the washing machine is not subject to warranty.

Sometimes, unusual or louder noise may appear during appliance operation; these are mostly the result of improper installation.

Washing machine installation clearances

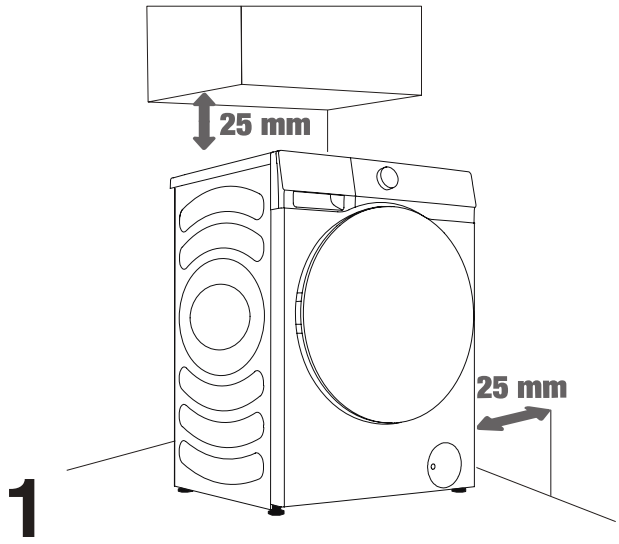

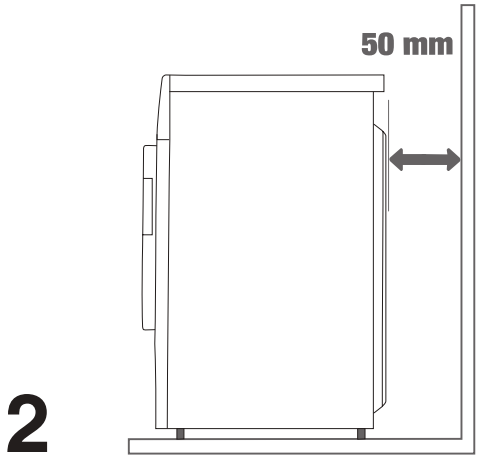

The washing machine may not be in contact with a wall or adjacent furniture. For optimum washing machine operation, we recommend observing the clearances from the walls as indicated in the figure.
In case of failure to observe the minimum required clearances, safe and correct washing machine operation cannot be ensured. Moreover, overheating can also occur (figures 1 and 2).

Installing the washing machine under a countertop is not recommended.

CONNECTING TO WATER SUPPLY

Attach the hose to the water tap by screwing it onto the thread.

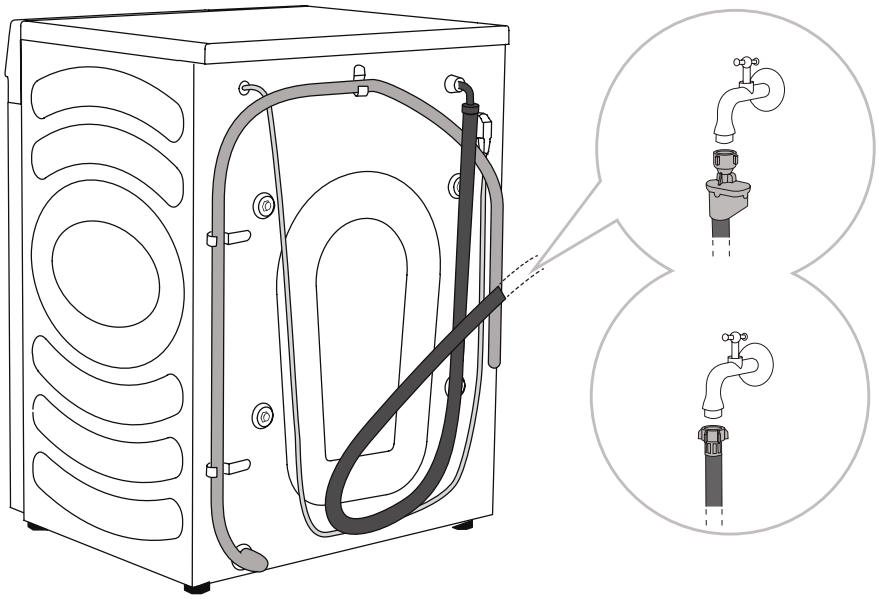

A AQUA STOP

B REGULAR CONNECTION

For normal washing machine operation, the pressure in the water mains should be between 0.1–1 MPa (1-10 bar; 1–10 kp/cm^2 ; 10–100 N/cm^2). Minimum dynamic water pressure can be determined by measuring the water flow. In 15 seconds, 3 litres of water should flow from a fully open tap.

Tighten the water supply hose by hand, firmly enough for the hose to have a good seal (max. 2 Nm). After connecting the hose, the seal must be checked for any leaks. Do not use pliers or similar tools when connecting the hose as this could damage the nut thread.

Only use the water supply hose supplied with the appliance. Do not use any used or other hoses.

Make sure the hose is not damaged. If the hose is degraded, brittle, or cracked, it has to be replaced.

AQUA STOP (ONLY WITH SOME MODELS)

If an internal tube or hose is damaged, a shut-off system is activated that cuts the water supply to the washing machine. In such case, the control glass (a) will turn red. Replace the water supply hose.

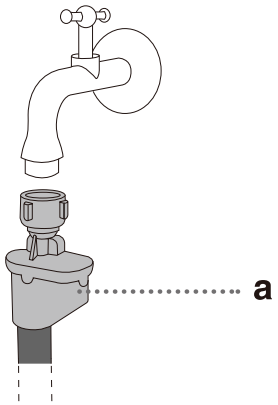

Do not dip the water supply hose with the Aqua stop system in water as it contains an electric valve.

The water supply hose can be connected without a non-return valve.

When connecting the water supply hose, make sure to connect it in a way that allows adequate and unobstructed water supply.

CONNECTING AND SECURING THE WATER DISCHARGE HOSE

Feed the water discharge hose into a washbasin or a bathtub, or connect it directly to a drain (discharge hose minimum diameter 4 cm). The vertical distance from the floor to the end of the discharge hose may be no more than 100 cm and no less than 60 cm. It can be attached in three ways (A, B, C).

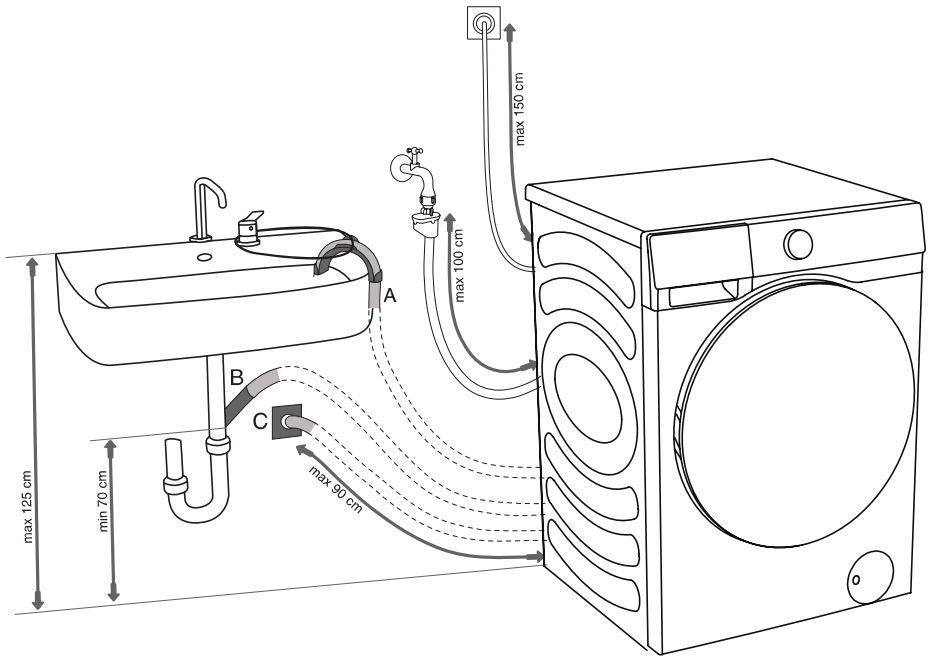

A Discharge hose end may be placed over a sink or a bathtub. Use a string fed through the opening in the elbow support to attach the hose and prevent it from slipping to the floor.

B Discharge hose may also be attached directly to the sink drain. A sink that is too small is not acceptable. Be careful as the drained water may be hot.

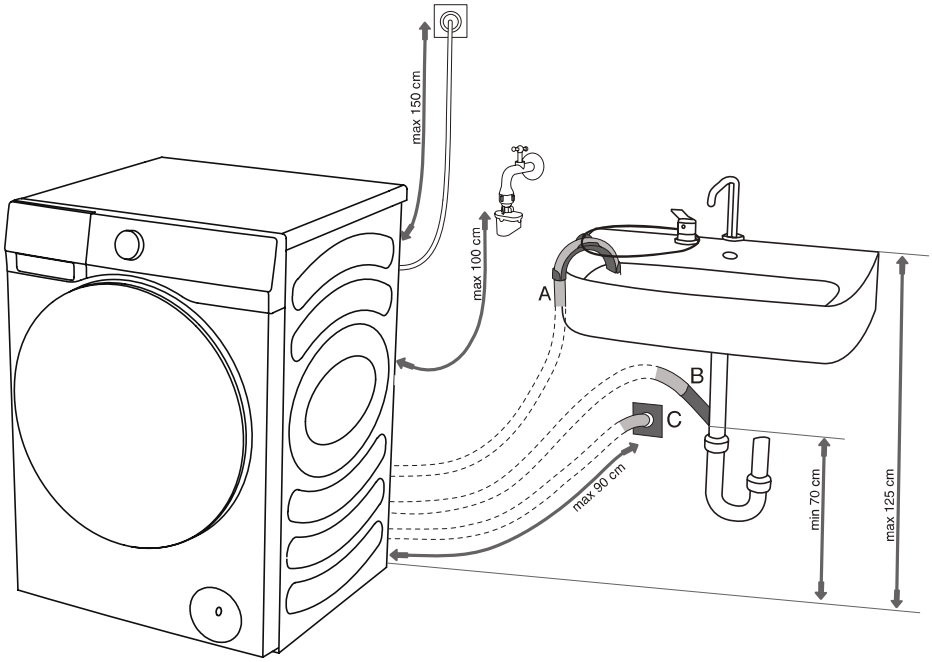

C Discharge hose can also be attached to a wall drain with a trap; such trap should be properly installed to allow cleaning.

D The discharge hose has to be attached and affixed to the pin on the back of the washing machine, as shown in the figure.

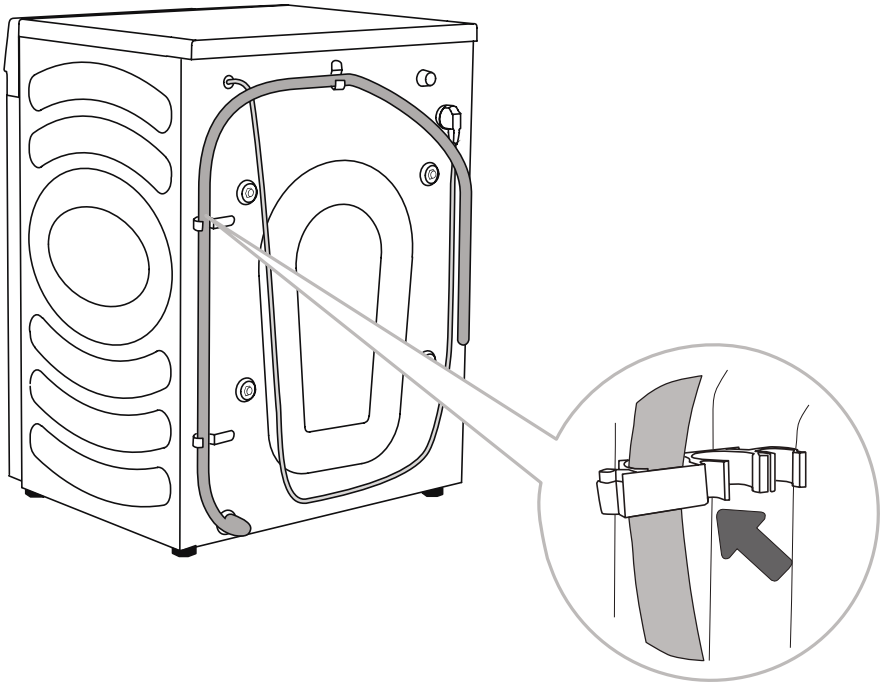

Make sure the drain hose is not damaged.

If the discharge hose is not correctly attached, safe and correct washing machine operation cannot be ensured.

CONNECTING THE APPLIANCE TO THE POWER MAINS

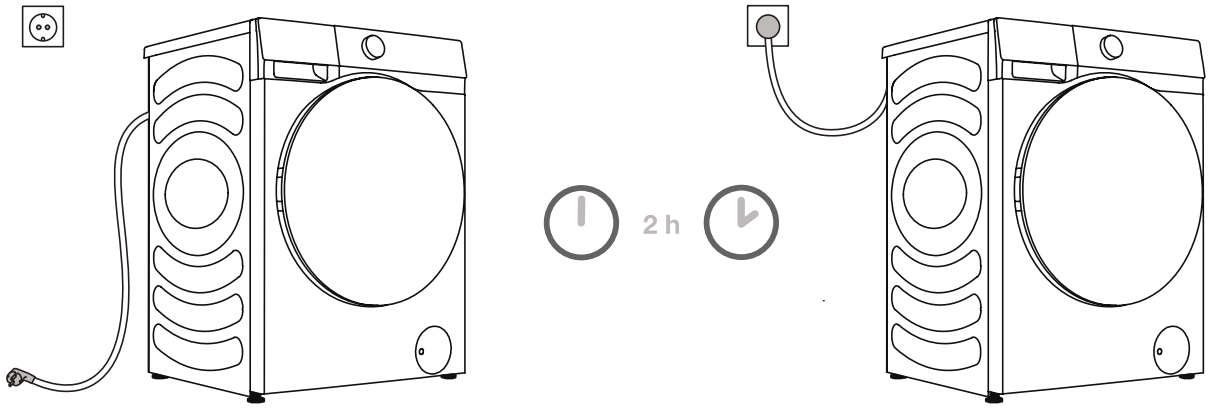

⚠ **Before connecting the washing machine to the power mains, wait for at least 2 hours until it reaches room temperature.**

Connect the washing machine to a grounded power outlet. After installation, the wall outlet should be freely accessible. The outlet should be fitted with an earth contact (in compliance with the relevant regulations).

Information on your washing machine is indicated on the rating plate.

⚠ **We recommend using over-voltage protection to protect the appliance in case of a lightning strike.**

⚠ The washing machine may not be connected to the power mains using an extension cord.

Do not connect the washing machine to an electrical outlet intended for an electric shaver or hair dryer.

Do not plug or unplug the appliance when your hands are wet.

Any repair and maintenance pertaining to safety or performance should be done by trained experts.

A damaged power cord may only be replaced by a person authorized by the manufacturer.

BEFORE USING THE APPLIANCE FOR THE FIRST TIME

Make sure the washing machine is disconnected from the power mains; then, open the door towards you (figures 1 and 2).

Before using the appliance for the first time, clean the drum using a soft and moist cotton cloth, or use the Drum Clean program. In such case, connect the appliance to the power mains and open the water tap. There should not be any laundry in the drum; the drum should be empty (Figures 3 and 4).

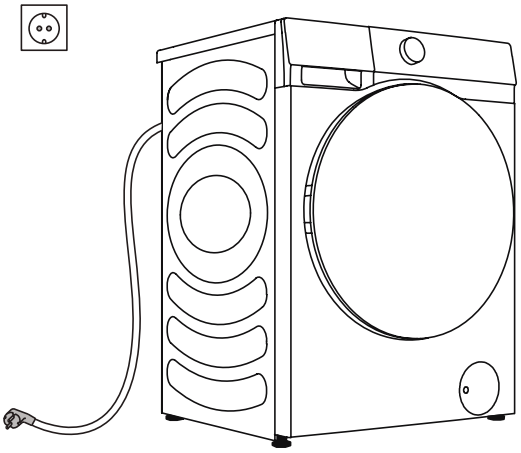

1

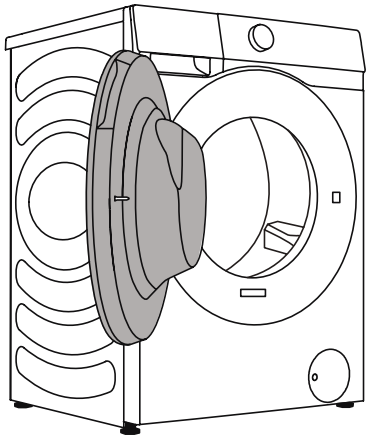

2

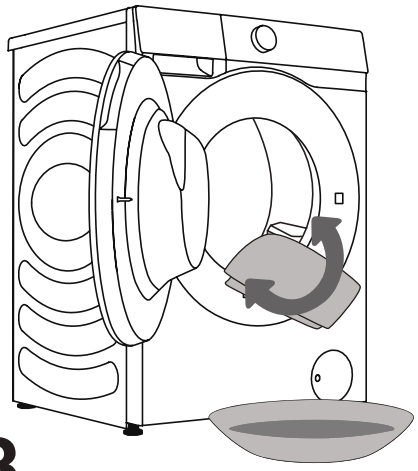

3

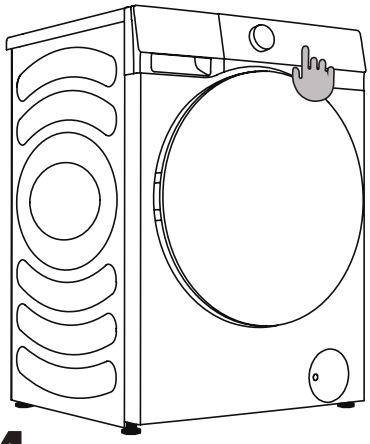

4

⚠ Do not use any solvents or cleaning agents that could damage the washing machine (please observe the recommendations and warnings provided by the cleaning agent manufacturers).

WASHING PROCESS, STEP BY STEP (1–6)

STEP 1: HEED THE LABELS ON THE LAUNDRY

Normal wash; Sensitive laundry	Max. washing temp. 95°C 95 95	Max. washing temp. 60°C 60 60	Max. washing temp. 40°C 40 40	Max. washing temp. 30°C 30 30	Hand wash only	Do not wash
Bleaching	Bleaching in cool water c1			Bleaching not allowed		
Dry cleaning	Dry cleaning with all agents A	Petroleum solvent R11, R113 P		Dry cleaning in kerosene, pure alcohol, and R113 F	Dry cleaning not allowed	
Ironing	Hot ironing, max. 200°C	Hot ironing, max. 150°C		Hot ironing, max. 110°C	Ironing not allowed	
Drying	Dry flat (place on a flat surface)	Drip dry Line dry		High temperature Low temperature	Do not tumble dry	

STEP 2: PREPARING THE WASHING PROCESS

1. Sort the laundry by type of fabric, colour, soiling, appliance load, and allowed washing temperature (see PROGRAMME TABLE).
2. Close the buttons and zippers, tie any ribbons, and turn the pockets inside out; remove any metal clips that could damage the laundry and washing machine interior, or clog the drain.
3. Place very sensitive clothes and small items in a special-purpose laundry washing bag.

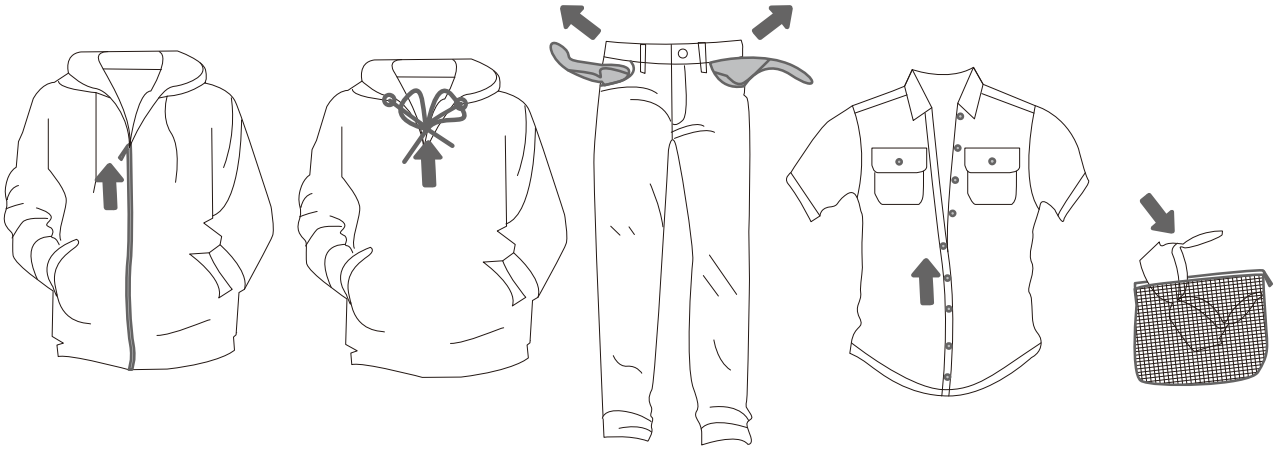

▶ ADDING OF DETERGENT/SOFTENER

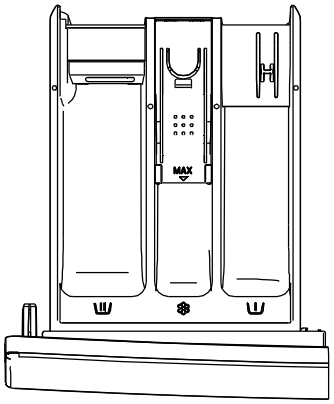

Style ①

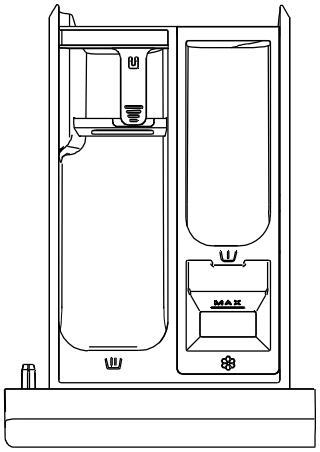

Style ②

（The detergent compartment style depends on the model）

Symbols of detergent dispenser compartments	
	prewash
	main wash
	softener

We recommend adding powder detergent immediately before the washing cycle. If you add it sooner, make sure the detergent compartment in the dispenser tray is completely dry before adding the powder detergent: otherwise, the powder detergent may cake before the start of the washing process.

Pour the softener into the detergent compartment, into the compartment with the symbol . Observe the recommendation on the softener packaging.

Do not fill the softener compartment over the Max indicated level.
Otherwise, the softener will be added to the laundry too soon, leading to poorer washing effect.

Keep detergents and additives out of reach of children.

SWITCHING ON THE WASHING MACHINE

Use the power cord to connect the washing machine to power mains, and connect the washing machine to water supply.

Turn the appliance on by press the button "POWER" (figures 1 and 2).

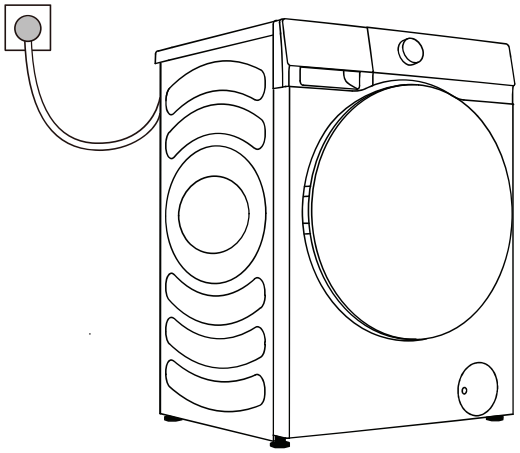

1

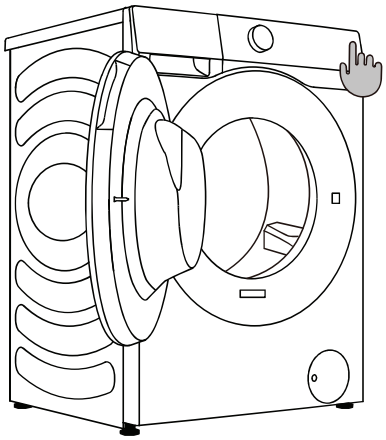

2

LOADING THE WASHING MACHINE

Open the washing machine door by pulling the handle towards you (figure 1).
Insert the laundry into the drum (after making sure the drum is empty) (figure 2).
Close the washing machine door (figure 3). The door is closed when you here a click.

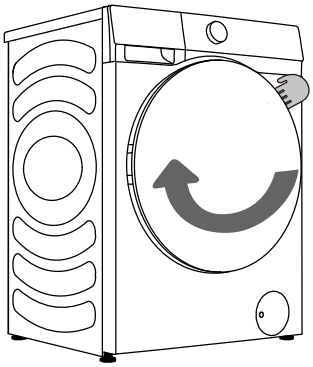

1

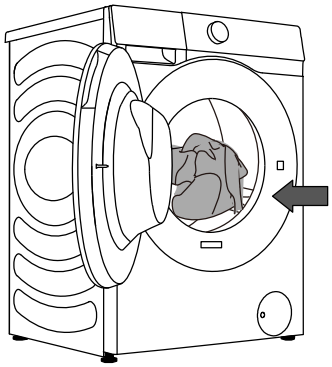

2

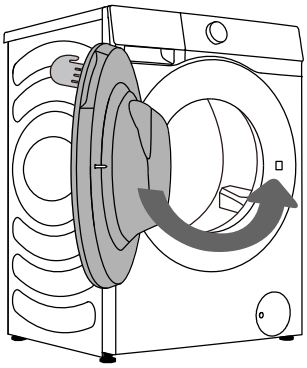

3

Never try to forcefully open the door. Moreover, do not open the door during washing machine operation.

Do not overload the drum! See PROGRAMME TABLE and observe your nominal load as indicated on the rating plate.
If the washing machine drum is too full, the laundry will not be washed as thoroughly.

CONTROL UNIT

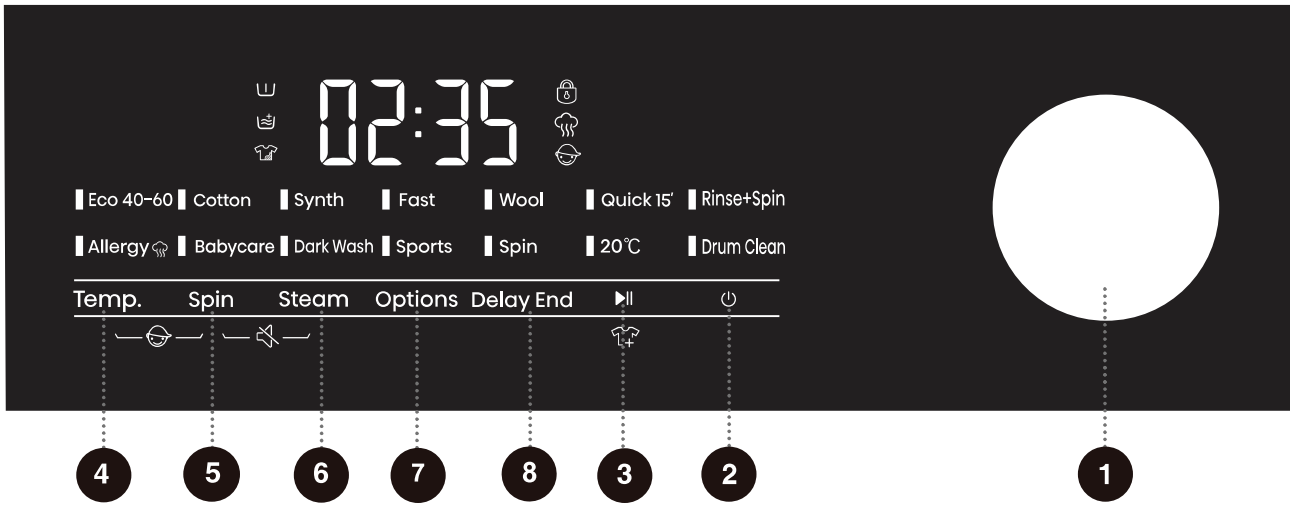

1 CYCLE SELECTOR

Turn the dial to select a cycle.

2 POWER

Press to turn on/off the machine.

3 START/PAUSE

Start/Pause the whole machine program running.

4 TEMP.

Press to change the water temperature for the selected cycle.

5 SPIN

Press to change the spinning speed for the current cycle.

6 STEAM

Press to selcet Steam function.

7 OPTIONS

Press this button to select additional functions.

8 DELAY END

Delay End lets you set the end time of the current cycle.

4+5 CHILD LOCK

Press these two keys at the same time to enable or disable the Child Lock function.

5+6 MUTE

Press these two keys at the same time to switch off or restore the acoustic signals.

STEP 3: CHOOSING THE WASHING PROGRAMME

Choose the programme by rotating the programme selector knob (1) to the left or right (depending on the type of laundry and how heavily soiled it is). See programme table.

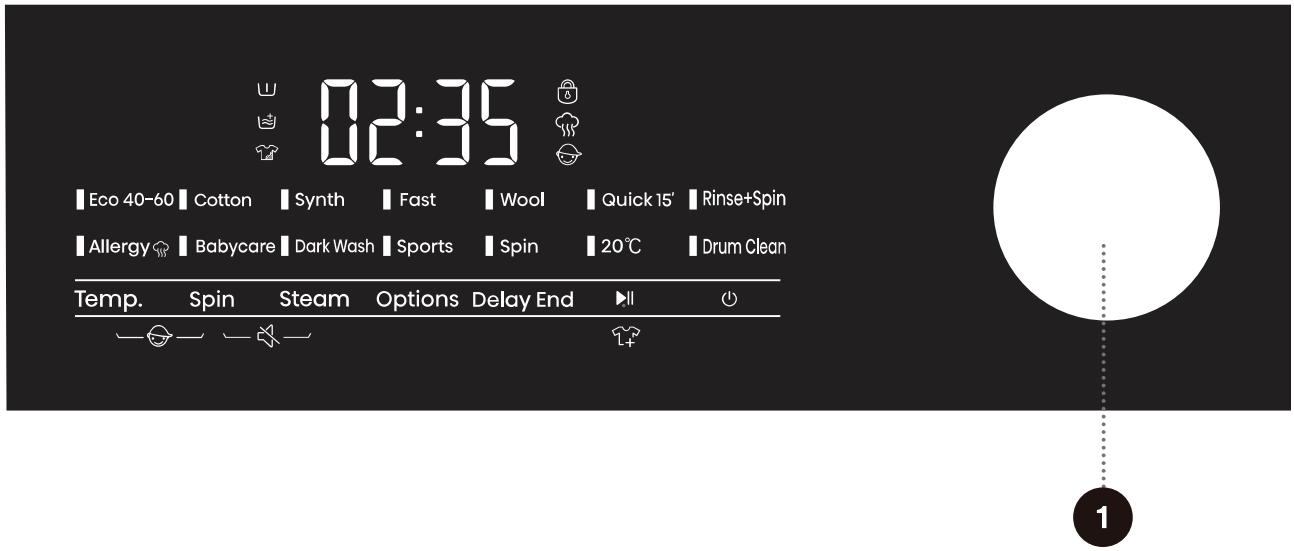

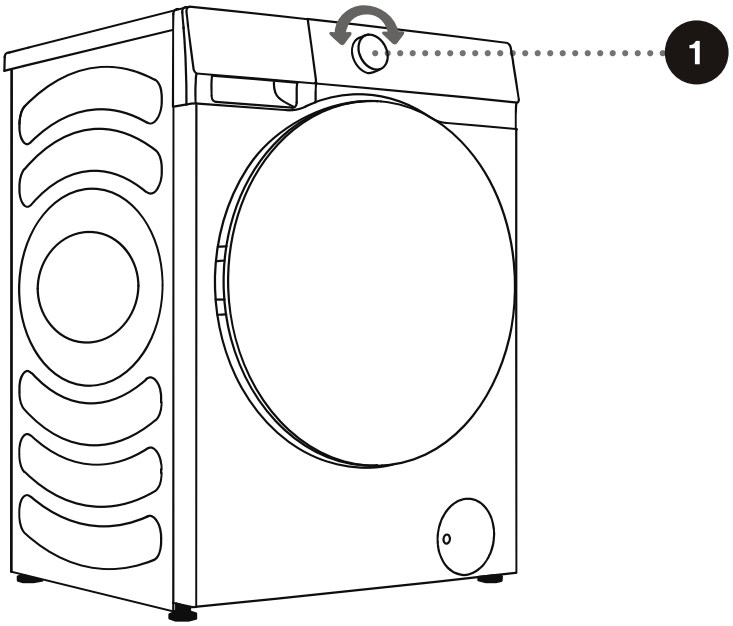

During operation, the programme selector knob will not rotate automatically.

PROGRAMME TABLE

Programme	Max. load	Max spinning rate (rpm)	Programme description
Eco 40-60	9kg	1400	Normally soiled cotton.
Cotton (**--** , 20°C, 30°C, 40°C, 60°C , 90°C)	9kg	1400	Heavily and moderately soiled cotton or linen. For very heavily soiled items select the "Prewash" function.
Synth (-- , 20°C, 30°C, 40°C, 60°C)	4.5kg	1400	For fabrics that are made of polyester or similar.
Fast (-- , 20°C, 30°C, 40°C, 60°C)	4.5kg	1400	Mixed loads of moderately soiled cotton and synthetic fabrics
Wool (-- , 20°C, 30°C, 40°C)	2kg	600	Machine washable wool.
Quick 15' (-- , 20°C, 30°C, 40°C)	1kg	800	Lightly soiled cotton and mixed fabrics.
Rinse+Spin	9kg	1400	Two rinses and a spin.
Allergy (60°C)	2kg	1400	Removes allergens such as pollens, mites and parasites using high temperature and steam. Not suitable for fabrics that fade easily.
Babycare (40°C, 60°C, 90°C)	2kg	1400	Sterilizes and disinfects through temperature and steam. Ideal for baby clothes and underwear. Not suitable for fabrics that fade easily.
Dark Wash (-- , 20°C, 30°C, 40°C, 60°C)	4.5kg	1000	Dark machine washable fabrics.
Sports (-- , 20°C, 30°C, 40°C)	3.5kg	1000	Synthetic sports and leisure wear.

Programme	Max. load	Max spinning rate (rpm)	Programme description
Spin	9kg	1400	Spin only. Select the duration and speed manually.
20℃ (20°C)	9kg	1400	Energy saving. Lightly soiled clothing.
Drum Clean (90°C)	/	800	Removes residues and bacteria. The drum must be empty. We recommend running this program once a month.

NOTE:
1) Water Temperature: select the appropriate water temperature for **the** chosen wash programme. Always follow garment manufacturer's care label or instructions when washing to avoid damage to clothes.
2) Actual water temperature may differ from the declared cycle temperature.
3) The washing effect depend on water pressure, water hardness, water inlet temperature, room temperature, type and amount of load, degree of soiling utilized detergent, fluctuations in the main electricty supply and chosen additional options.
4) If you add a considerable amount of laundry during the wash, the laundry could be washed less effectively, since the washing machine initially sensed a lower weight of the load of laundry and added a smaller amount of water. Insufficient amount of water relative to the amount of laundry could also cause damage to the laundry (rubbing of dry laundry), and washing time can be longer.

Maximum amount of laundry for washing, in kg (for the cotton programme), is indicated on the rating plate.

Maximum or nominal load applies to laundry prepared pursuant to the IEC 60456 standard.

For better washing effect, we recommend loading the drum to 2/3 when using the cotton programmes.

CHOOSING THE DETERGENTS AND ADDITIVES

Always choose highly efficient detergents that do not foam and which are intended for front-loading appliances.

The choice of detergent depends on the type, soil level, laundry colour, and washing temperature.

White residues (streaks etc.) on black laundry may appear if you are using modern phosphate-free detergents. In such case, brush the streaks and use a liquid detergent.

Only use detergent intended for appliances for household use.

Descaling agents may damage the appliance. Do not wash the clothes that were cleaned with solvents or flammable substances.

Observe the manufacturer's instructions on detergent dosing.

Excessive amount of detergent may result in foaming that in turn impairs washing efficiency. If the appliance senses excessive foaming, it may prevent the spin cycle from taking place. If the amount of detergent is too small, the laundry may no longer be white after a while. It could also result in accumulation of limescale in the drum and the pipes.

STEP 4: SELECTING ADDITIONAL SETTINGS AND FUNCTIONS

Most programmes feature basic settings, but these settings can be changed.

Adjust the settings by pressing the relevant function button (before pressing the START/PAUSE button).

Activate/deactivate the functions by pressing the desired function (before pressing the START/PAUSE button).

Certain settings cannot be selected with some programmes. Such settings will not be lit, and when the corresponding button is pressed, an acoustic signal will be emitted (see FUNCTION TABLE).

The additional settings and functions can only be set in the standby mode of the applicable program, that is, before the program starts running, and cannot be selected after the program runs.

2 Power

For powering on/off the washing machine.
When the washing machine is in standby, or after the screen displays the program end interface, press and hold the Power key to enter the power-off state.
In standby mode, or in the program end interface or Wash retry reminder interface, if no operation is performed within 2min, the washing machine will shut down automatically.
In power-off state, all displays and outputs will be off, and remote startup is not supported.

3 Start/Pause

For starting a program, or suspending a running program.

If the machine door isn't closed or the door lock is not engaged, the washing machine will not start, and an alarm will be displayed on the screen.

After a program is started, or when the pause state is selected, the set functions and parameters cannot be changed. Press and hold the Power button to turn off the machine, and then restart it to reset the parameter.

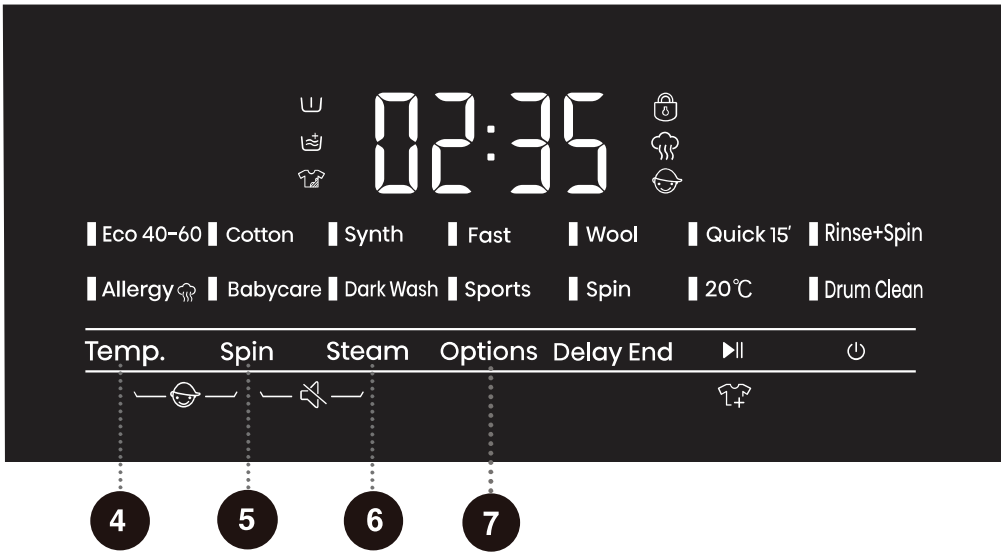

4 Temp.

Changing the temperature for the selected program.
Each program has a preset temperature that can be changed by pressing the position TEMP. (--indicates cold wash).
The temperature is displayed on the display unit above the button.

5 Spin

Use this to adjust the spinning rate. With preset or selected spinning rate, the selected spinning rate will be lit on the display unit.

6 Steam

Press to add "Steam" function, press twice to cancel the function, and cycle in sequence.

Programs with the steam icon "" can use the steam function. The Allergy and Babycare programs come with the steam function by default and it can not be deactivated.

7 Options

At standby state, press "Options" button to select additional function for current program. Select only one function for each press, and then corresponding icon flashes. After starting up, program cannot be changed.

Pre-wash

Select this function to conduct pre-wash so as to enhance washing effects and better remove stains. This function is suitable for heavy dirt clothes.

When selecting the pre-wash function, please add detergent to the prewash compartment of the detergent dispenser.

Extra Rinse

After set the function of extra rinse, the program runs the rinsing process once again before running the softening, and the total running time of the program increases accordingly.

Intensive

This function can be used to increase the intensive wash time and enhance the wash intensity.

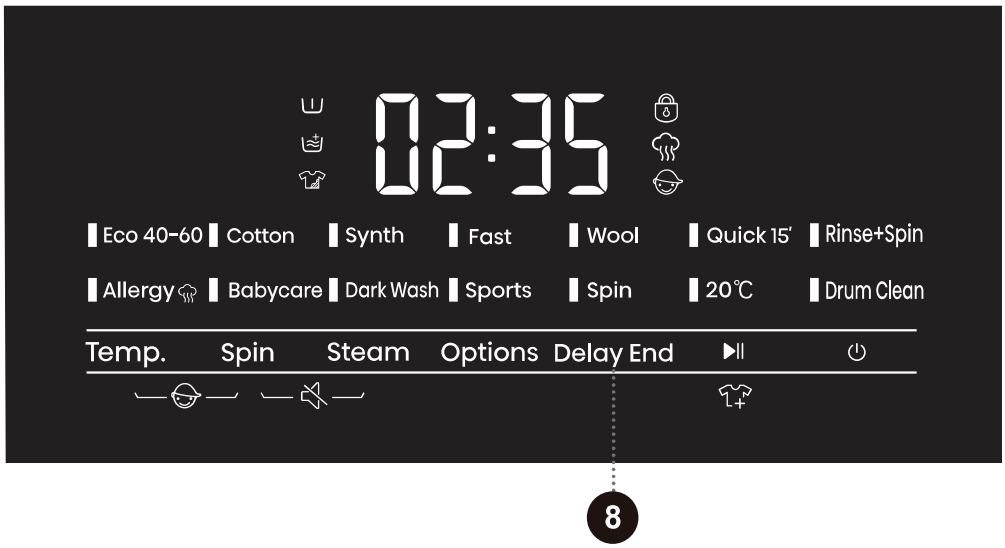

8 Delay End

Use this feature to schedule washing at a convenient time.
Press this key to set the Delay End time.This key is only valid in standby mode. After the Delay End function is selected, each time the Delay End key is pressed, the time increases by 1h. The maximum selectable time range is 24 hours.

The Delay End time is the end time, that is, it includes the washing time, so the Delay End time must be greater than the washing time. Based on your settings, the start time of the cycle will be determined by the machine's internal logic.Press to choose a preset unit of hours.

When the reservation process is operated, the icon of 'reservation time' will be on. When the reservation process is finished, the icon of 'reservation time' will be off.

If the Delay End function was chosen before starting a program, it can be canceled by pressing any other function key. Once the program has started, you need to press and hold the Power button to turn off and restart the machine to cancel the Delay End function.

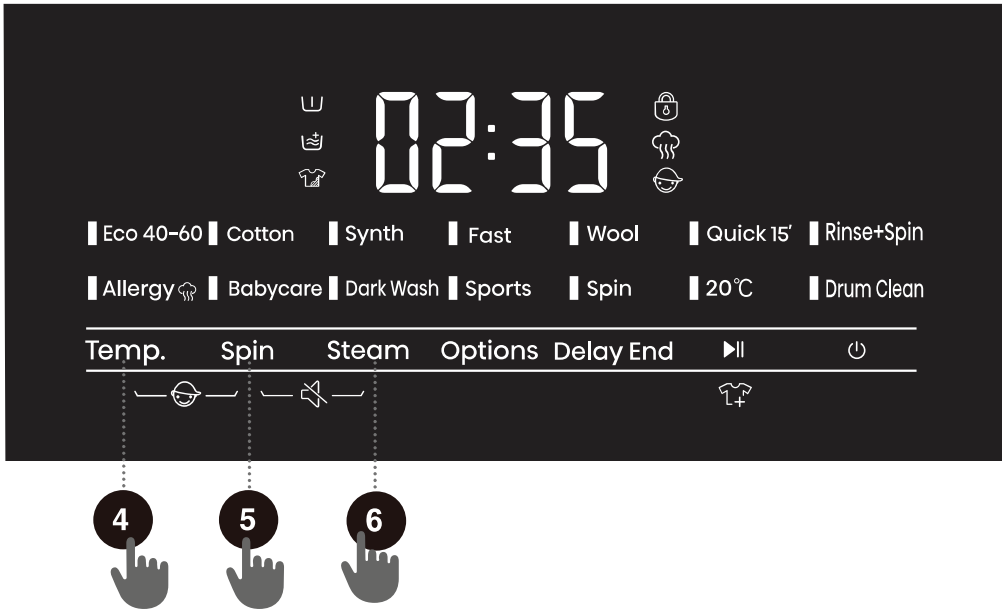

4 + 5 Child Lock

This is a safety feature. To activate it, simultaneously press "Temp.+Spin" buttons for 2 seconds, Child Lock icon will light up, and then Child Lock is set up. Repeat the same operation, the Child Lock will be released.

When the Child Lock is set, all function buttons will be shielded except the Power function.
After completing program, child lock will automatically unlock.

5 + 6 Mute

Use this to switch off or restore the acoustic signals.
When the machine is in the state of holding, pause or operation, press "Spin+Steam" buttons for 2 seconds, the display will show "bEEP oFF" icon. All the buzzing will be turned off except the alarms.

When the machine is in the mute state, repeat the same operation until the display show "bEEP on" icon. All the buzzing will be activated.

Door Lock

When the program has started, door lock icon "" will lights up, door lock will set up. Do not force the door open at this time to avoid injury. When the machine is paused or after the program is end, if the unlocking conditions are met, the door lock will be automatically released, door lock icon will light off.

FUNCTION TABLE

PROGRAMMES	DETERGENT COMPARTMENT			TEMP.	SPIN	STEAM	PRE WASH	EXTRA RINSE	INTENSIVE	DELAY END	CHILD LOCK	MUTE
	PREWASH	MAIN WASH	SOFTENER									
Eco 40-60	-	✓	•	-	•	-	-	-	-	•	•	•
Cotton	✓	✓	•	•	•	•	•	•	•	•	•	•
Synth	✓	✓	•	•	•	•	•	•	•	•	•	•
Fast	✓	✓	•	•	•	-	•	•	•	•	•	•
Wool	-	✓	•	•	•	-	-	•	-	•	•	•
Quick 15'	-	✓	•	•	•	-	-	•	-	•	•	•
Rinse+Spin	-	-	•	-	•	-	-	•	-	•	•	•
Allergy	✓	✓	•	-	•	○	•	•	•	•	•	•
Babycare	✓	✓	•	•	•	○	•	•	•	•	•	•
Dark Wash	✓	✓	•	•	•	-	•	•	•	•	•	•
Sports	✓	✓	•	•	•	-	•	•	•	•	•	•
Spin	-	-	-	-	•	-	-	-	-	•	•	•
20℃	✓	✓	•	-	•	-	•	•	•	•	•	•
Drum Clean	-	-	-	-	-	-	-	-	-	•	•	•

• Optional functions
- Can not be selected
✓ Detergent required
○ Function non-cancellable

TIME OPTIMISATION DURING THE PROGRAMME PROGRESS

In the early stage of the washing programme, the washing machine uses advanced technology to detect the amount of laundry. After load detection, the washing machine adjusts the programme duration.

STEP 5: STARTING THE WASHING PROGRAMME

Once you have selected the programme and extra functions, and added the detergent into the detergent compartment, press the **START**/PAUSE button.

After pressing the **START**/PAUSE button, child lock can be activated or deactivated, and sound signal can be set; other settings, however, cannot be changed.

When the program starts, " ---- " will appear on the display unit, which indicates that the laundry is being weighed. Program duration (hours : minutes) will be adjusted automatically according to the laundry weight.

After the start of the programme, Door Lock "🔒" will be lit on the display unit. When the program is complete, the icon will disappear.

If you press the **START**/PAUSE button during program operation, and all conditions are met for you to open the door, then the "🔒" will disappear as well.

If the "🔒" flashes, this means that the door can not be opened; in such case, do not attempt to open the door by force.

If anything is flashing on the display unit, the washing machine door is open or not closed correctly. Close the washing machine door and press the **START**/PAUSE button again to resume the washing programme.

STEP6 : END OF THE WASHING PROGRAMME

An acoustic signal will indicate the end of the washing process; the display will read »End«. The appliance will switch off automatically if you do not perform any action within 2 minutes.

1. Open the washing machine door.
2. Take the laundry from the drum.
3. Close the door!
4. Shut off the water supply tap.
5. Unplug the power cord from the outlet.

ENTER THE AFTER-SALES QUERY MODE

1. In the OFF mode, press the "Temp." + "Steam" + " ⏻ " to enter the after-sales inquiry mode.
2. It displays the number of operation cycles.
3. Press "Steam" to switch cycles or fault codes.
4. When querying fault codes, press the "Temp." to page up and the "Spin" to page down.
5. Press the " ⏻ " button for 3 seconds, you will exit query mode.

INTERRUPTIONS AND CHANGING THE PROGRAMME

CHANGE OF WASHING PROGRAMME

To stop and cancel a washing programme, press the button "POWER"for 2 seconds.
To select a new programme, choose the programme by rotating the knob and select extra functions.
Press the start/pause button, without adding the detergent again.

MANUAL INTERRUPTION

To stop and cancel a washing programme, press the button "POWER"for 2 seconds.

PAUSE BUTTON

The washing programme can always be stopped by pressing the START/**PAUSE** button. The washing programme is **temporarily paused** when the time remaining until programme completion is flashing on the display unit. If there is no water in the drum and water temperature is not too high, then the door will unlock , and they can be opened. To resume the washing program, first close the door and then press the key **START**/PAUSE button.

ADDING/REMOVING LAUNDRY DURING WASHING MACHINE OPERATION

During a pause, the time on the display will blink. If the conditions are met, the door lock will automatically release, allowing you open the door to add or remove clothes. If the conditions for opening the door are not met, the door can not be opened.

After adding clothes midway, press start/pause button and the washing program will resume running.

If you add a considerable amount of laundry during the wash, the laundry could be washed less effectively, since the washing machine initially sensed a lower weight of the load of laundry and added a smaller amount of water. Insufficient amount of water relative to the amount of laundry could also cause damage to the laundry (rubbing of dry laundry), and washing time can be longer.

Washing time will resume from the point at which the washing programme was interrupted.

When the program is suspended in spin state and then restarted, it will run again from the initial state of spin.

ERRORS

In case of an error or fault, the programme will be interrupted.
Flashing signal lights and an acoustic signal will warn about such occurrence (see TROUBLESHOOTING TABLE), and the error will be indicated on the display (F:XX).

POWER SUPPLY FAILURE

In case of a power supply failure (power outage), the washing programme is interrupted. When power supply is restored, the program is resumed in the stage in which it was interrupted.

EMERGENCY DOOR OPENING

⚠ **If there is still water in the washer dryer after a power outage, make sure not to open the door before you manually drain the water from the washer dryer via the pump filter.**

In case of failure to open the door due to power outage or other special circumstances, the door lock lever at the drainage pump door can be used for emergency opening.

Note:

1. Do not operate when the machine is working normally;

2. Before operation, please make sure that the inner barrel has stopped turning, without high temperature, and the water level is lower than the clothing inlet. If the water level is higher than the clothing inlet, drain off water through the drain-away pipe (if available) or by slowly unscrewing the filter.

3.Operation method: Open the cover of drainage pump door, pull down the lock lever with the help of a tool, and then the door can be opened(indicated in the figure).

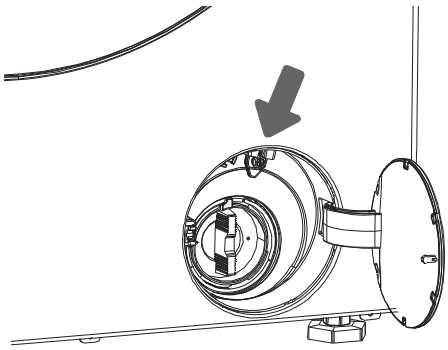

MAINTENANCE & CLEANING

⚠ **Before cleaning, unplug the washing machine from the power mains.**

Children should not clean the washing machine or perform maintenance tasks without proper supervision!

CLEANING THE DETERGENT COMPARTMENT

Clean the detergent compartment regularly.

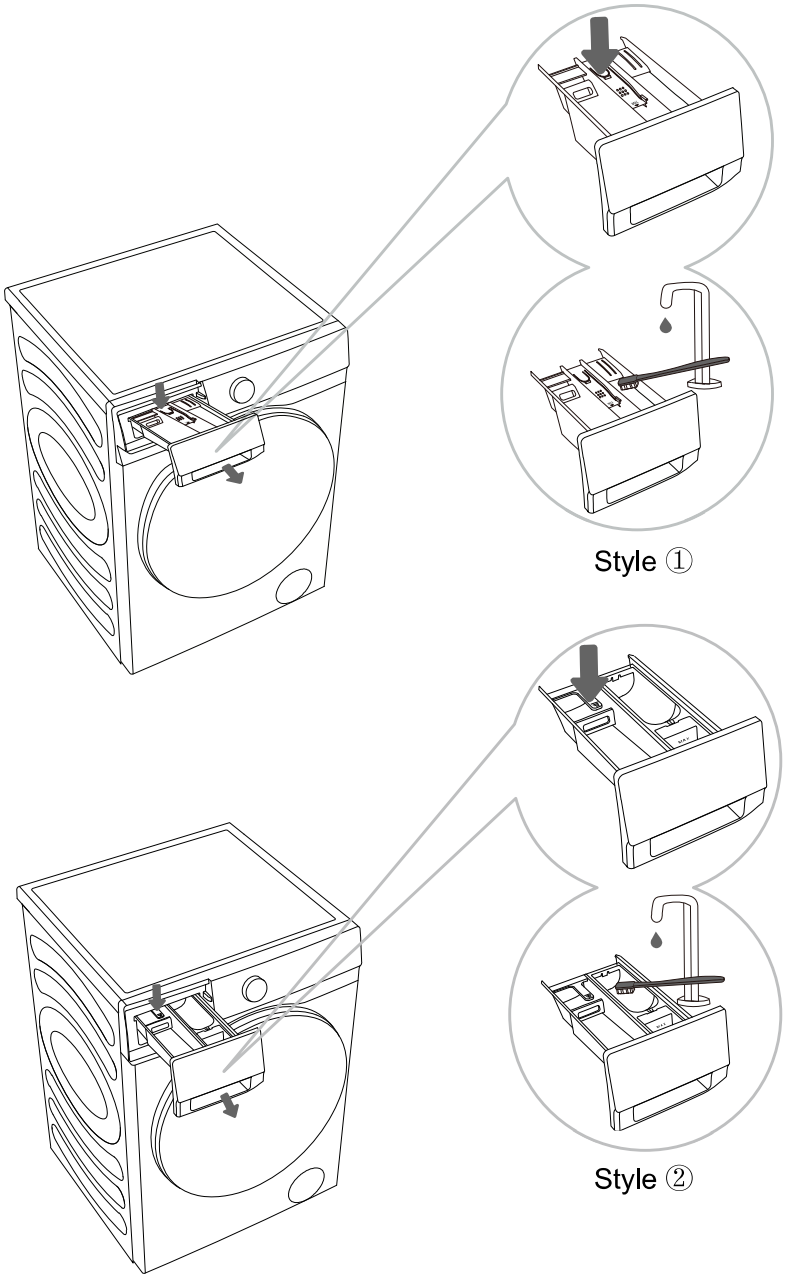

1 To remove the detergent compartment from the housing, press the small tab.

2 Clean the detergent compartment under running water using a brush, and dry it. Also, remove any detergent residue from the bottom of the housing. Remove the conditioner insert (softener insert) from the detergent compartment. Wash all parts under running water, and conditioner insert (softener insert) into detergent compartment and re-insert them into the detergent compartment housing.

Do not wash the detergent compartment in a dishwasher.

CLEANING THE WATER SUPPLY HOSE, DETERGENT DISPENSER HOUSING, AND RUBBER DOOR GASKET

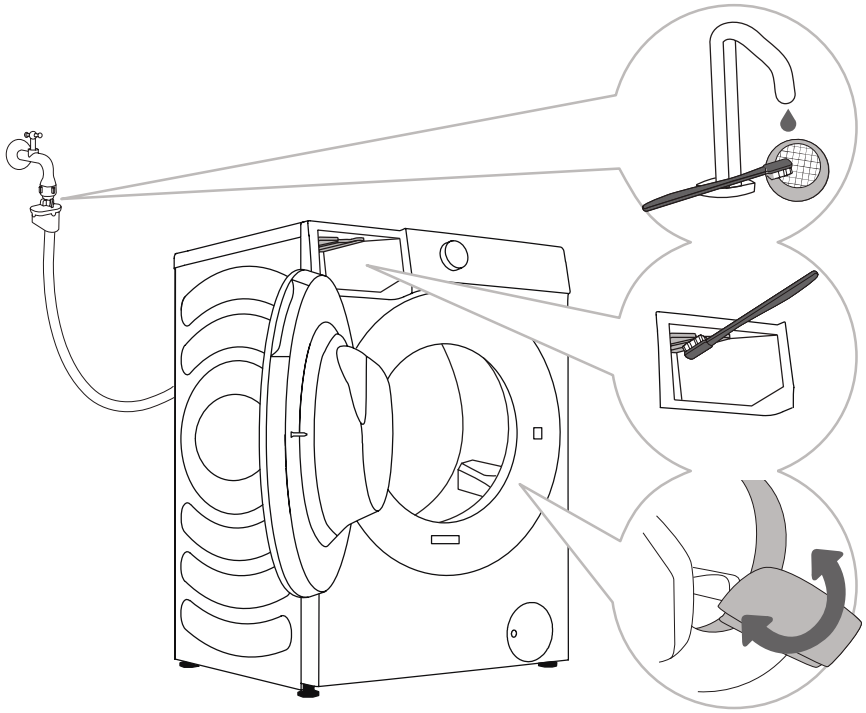

1 Clean the net filter often under running water.

2 Use a brush to clean the entire appliance rinsing section, especially the nozzles on the upper side of the rinsing chamber.

3 After every wash, wipe the rubber door seal to extend its useful life.

CLEANING THE WATER INLET FILTER REGULARLY

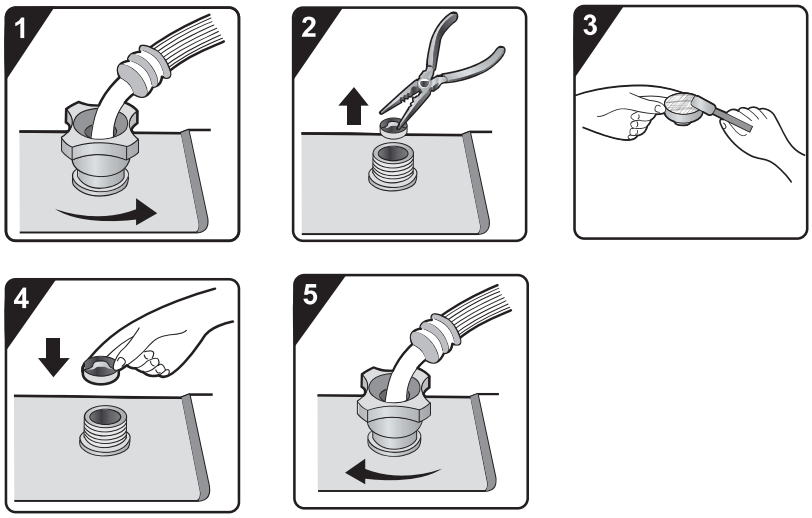

1 Close the tap and unscrew the inlet hose on the rear of the appliance.

2 Pull off the mesh filter from the appliance connection with universal pliers.

3 Clean the internal mesh filter.

4 Refit the mesh filter again.

5 Screw the inlet hose on. Turn on the tap and ensure that the connections are completely water-tight.

- The water inlet filter collects lime or any sediment that may be in water that is supplied to the appliance.
Clean the inlet filter every six months or so, or more often if the water is very hard or contains traces of limescale.

CLEANING THE PUMP FILTER

During cleaning, some water may be spilled. It is therefore recommended to place an absorbent cloth on the floor.
Make sure the water has cooled down before you release it from the appliance.

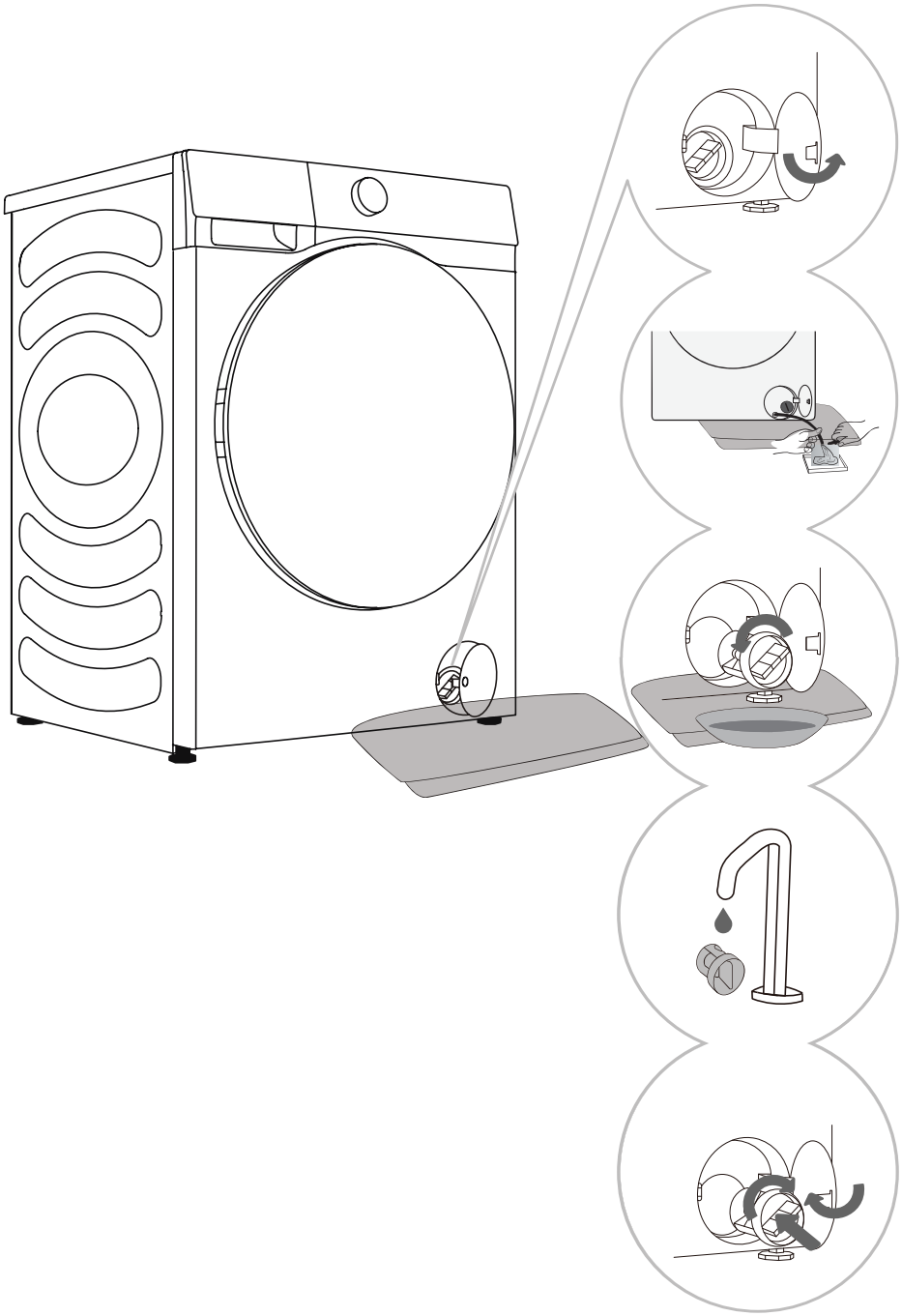

1 Open the pump filter cap.
Style1: Press the door cover and automatically pop open.
Style2: Open the pump filter cap using a suitable tool.
The style depends on the model.

2 Place a towel under the filter door.
If the machine has a emergency drain pipe, pull out emergency drain pipe of machine. Put end of emergency drain pipe into a container.
If the machine doesn't have a emergency drain pipe, place a container under the pump filter.
The style depends on the model.
Rotate emergency drain pipe plug and remove it after it becomes loose Until water runs off naturally.
Reinstall emergency drain pipe plug.

3 Rotate the pump filter slowly in the counter-clockwise direction.
Pull out and remove the pump filter.

4 Clean the pump filter under running water.

5 Replace the pump filter as shown in the figure and fasten it by rotating in the clockwise direction.
For a good seal, the filter gasket surface should be clean.

The pump filter must be timely cleaned, especially after washing very fleecy, woolly, or very old laundry.
Also clean the pump filter if the appliance can not start the spinning cycle or when there is debris in the pump (buttons, coins, hair pins or clips etc.).

CLEANING THE WASHING MACHINE EXTERIOR

⚠ **Always disconnect the washing machine from the power mains before cleaning.**

Clean the washing machine exterior and display unit using a soft damp cotton cloth and water. Then, use a soft dry cloth to dry the appliance.

⚠ Do not use any solvents, abrasive cleaners, or cleaning agents that could damage the appliance (please observe the recommendations and warnings provided by the cleaning agent).

If necessary, wipe the appliance door with a damp cloth, and then dry with a dry soft cloth as well.

Do not clean the washing machine with a jet of water!

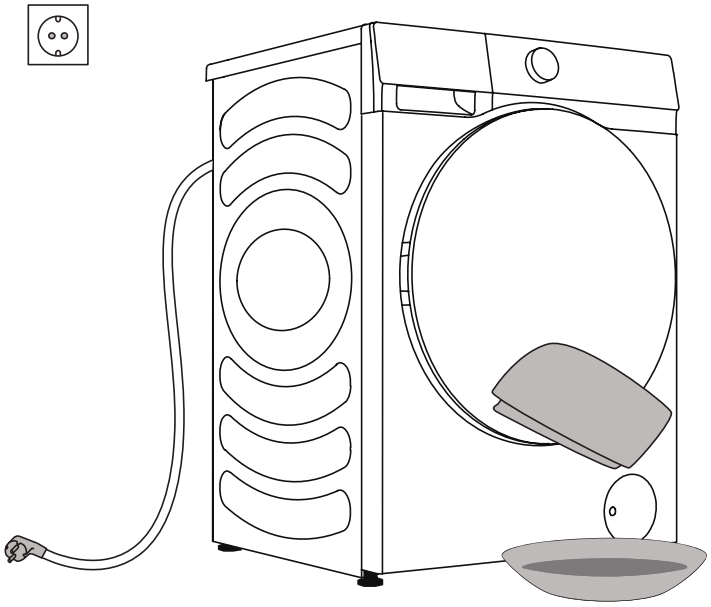

TROUBLESHOOTING

WHAT TO DO ...?

The washing machine shall automatically control the operation of particular functions during the washing cycle. If any irregularity is identified, this will be indicated by reporting (F:XX) on the display. The washing machine will report the error until it is switched off. Disturbances from the environment (e.g. the power grid) may result in various error reports (see TROUBLESHOOTING TABLE). In such case:

- Switch off the washing machine and wait for a few seconds.
- Switch on the washing machine and repeat the washing programme.
- Most errors during operation can be resolved by the user (see TROUBLESHOOTING TABLE).
- If the error persists, call an authorized service unit.
- Repairs may only be carried out by an adequately trained person.
- Repair or any warranty claim resulting from incorrect connection or use of the washing machine shall not be covered by the warranty. In such cases, the costs of repair shall be charged to the user.

The warranty does not cover the errors or failures resulting from disturbances from the environment (lightning strike, power grid failures, natural disasters etc.).

TROUBLESHOOTING AND ERROR TABLE

Problem/ error	Indication on the display unit and problem description	What to do?
F01	**Water inflow fault**	Check the following: • Is the water supply tap open and is the pressure too low? • Is the water supply hose pinched? • Is the filter on the water supply hose clogged • Is the hose frozen? Press the" start/pause "button again after exclusion.
F03	**Drainage fault**	Check the following: • Is the hose pinched, does the water flow through it? • Is the filter on the drain hose clogged • Is the hose frozen? Press the" start/pause "button again after exclusion.
F04/F05/F06/ F07/F23	**Electronic module fault**	Switch off the appliance; Press the"Power" for 2 seconds. Press the" start/pause "button again. If the error reoccurs, call a service technician.
F24	**Water level reaches overflow level**	Stop the programme by pressing the"start/pause" button. Restart the programme. If the appliance continues to pump water into the tub, close the water tap and call a service technician.
F13	**Error while locking the door**	Door is closed, but it cannot be locked. Switch off the washing machine. Switch it back on and restart the washing programme. If the error reoccurs, call a service technician.
F14	**Error while locking the door**	Door is closed, but it cannot be unlocked. Turn off the appliance, then turn it back on. If the error reoccurs, call a service technician.
Unb	**unbalance arm**	Unbalance alarm shall be solved by the following methods 1.Laundry winding Press the"Power" for 2 seconds to shutdown the washing machine, open the door, shake the clothes and put them back into the washing machine, then select the single dewatering program to try again. 2.Too light-weighted laundry Press the"Power" for 2 seconds for shutdown, open the door, put in one or two towels, and then select the single dewatering program to try again.

SERVICING

Before calling a service technician

When you contact a service centre, please state your washing machine's type.

Type, code/ID, model, and serial number are indicated on the rating (type) plate.

⚠ In case of a defect, only use approved spare parts by authorized manufacturers.

⚠ Repair or any warranty claim resulting from incorrect connection or use of the washing machine shall not be covered by the warranty. In such cases, the costs of repair shall be charged to the user.

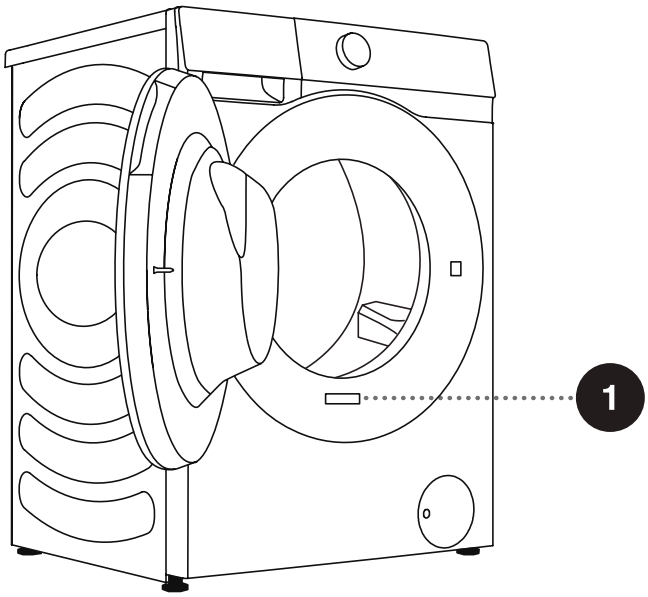

RECOMMENDATIONS FOR WASHING AND ECONOMIC USE YOUR WASHING MACHINE

Wash new coloured garments separately the first time.

Wash heavily soiled laundry in smaller amounts, with more powder detergent or with a pre-wash cycle.

Apply a special stain remover on stubborn stains before the wash. We recommend referring to STAIN REMOVAL TIPS.

If you often wash laundry at low temperatures and with liquid detergents, bacteria may spawn which can cause odour in the washing machine. To prevent such odour, we recommend occasionally running the Drum Clean.

We recommend avoiding washing very small amounts of laundry as this will lead to excessive use of energy and poorer washing machine performance.

Loosen any folded laundry before putting it into the drum.
Only use detergents for machine washing.

Add powder or liquid detergents as instructed by the manufacturer, according to the washing temperature and selected washing programme.

When using highly concentrated detergents, use special-purpose dosing cups (supplied with the detergent) and place them directly in the appliance drum.

If water hardness exceeds 14°dH, water softener should be used. Heater damage resulting from incorrect use of water softeners shall not be covered by the warranty. Check the information on water hardness with your local water supply company or authority.

Use of chlorine-based bleaches is not recommended as they can damage the heater.

If you use a descaling agent, bleach, or dye, only use the kind that is suitable for use in the appliance.

Do not use solvents or similar chemicals (e.g. paint thinner, turpentine, gasoline etc.)!

Do not add hardened lumps of powder detergent into the detergent dispenser as this may clog the piping in the washing machine.

When using thick liquid laundry care products, we recommend diluting them with water to prevent clogging the detergent compartment drain.
Liquid detergents are intended for washing programmes without a prewash cycle.

STAIN REMOVAL TIPS

Before using special-purpose stain removers, try using the natural methods that do not harm the environment on less stubborn stains.

However, prompt action is required! Soak the stain with an absorbent sponge or a paper towel; then, rinse with cold (lukewarm) water – but never with hot water!

Stains	Stain removal
Mud	When the stain is dry, first scrape it off the garment before washing it in the washing machine. If the stain is stubborn, soak it with an enzyme-based stain remover before the wash. If the stain is not stubborn, wash the laundry with liquid detergent or powder detergent and water before the wash.
Antiperspirant	Before washing in the washing machine, apply liquid detergent onto the laundry. Apply stain removers on any stubborn stains. Alternatively, use oxygen-based bleach for the wash.
Tea	Soak or rinse the laundry in cold water and add stain remover if necessary.
Chocolate	Soak or rinse the laundry with lukewarm soapy water. Then, apply lemon juice and rinse.
Ink	Before washing in the washing machine, apply stain removers on the stain. You may also use denatured alcohol. Turn the garment inside out and place a paper towel under the stain. Use the alcohol on the back side of the stain. At the end of the pro-cess, thoroughly rinse the garment.
Felt tip pens	Dilute some starch in water and apply it to the stain. When it dries, scrape it off with a brush; then, wash the garment in the washing machine.
Baby food (urine, mud, food stains)	Before washing in the washing machine, soak the stains in lukewarm water for at least half an hour. For easier stain re-moval, add an enzyme-based stain remover.
Grass	Before washing in the washing machine, soak the laundry in an enzyme-based stain remover. Grass stains can also be re-moved by soaking (for approx. 1 hour) in diluted lemon juice or distilled vinegar.
Eggs	Soak the garment in an enzyme-based stain remover. Soak in cold water for at least 30 minutes or a few hours if the stains are stubborn. Then, wash in the washing machine.
Coffee	Soak the garment in salt water. If the stain is not fresh, soak it with a mixture of glycerine, ammonia and alcohol.
Shoe polish	Apply cooking oil to the stain and rinse.

Stains	Stain removal
Blood	Fresh stain – rinse the garment with cool water and wash it in the washing machine. Dried stain – soak the garment in an enzyme-based stain remover. Then, wash in the washing machine. If the stain does not vanish, try to remove it with a bleach suitable for your garment.
Glue, chewing gum	Place the garment in a bag and put it in the freezer until the stain hardens. Then, remove it with a blunt knife. Then, dilute the stain with a prewash stain remover and rinse thoroughly. Then, wash the laundry as usual.
Makeup	Use a stain remover for the prewash; then, wash in the washing machine.
Butter	Before washing in the washing machine, apply stain remover to the stain. Then, rinse with hot water (as hot as the fabric will al-low).
Milk	Soak the garment in an enzyme-based stain remover. Soak for at least 30 minutes or a few hours if the stains are stubborn. Then, wash in the washing machine.
Fruit juice	Apply a mixture of salt and water on the stain. Leave to take effect for a while, then rinse. You can apply sodium bicarbonate, distilled vinegar or lemon juice on the stain before washing in the washing machine. For old stains, use glycerine. After 20 minutes, rinse with cold water, then wash the laundry in the washing machine.
Wine	Soak the laundry in cold water for at least 30 minutes. Also, use a stain remover. Then, wash in the washing machine.
Wax	Put the garment into the freezer until the wax hardens. Then, scrape it off. Remove the remaining wax by placing a paper towel onto the stain, and then heat it with an iron until the paper absorbs the wax.
Sweat	Before washing in the washing machine, rub liquid detergent thoroughly into the stain.
Chewing gum	Put the garment into the freezer until the chewing gum hardens. Then, scrape it off. Then, wash in the washing machine.

DISPOSAL

Packaging is made of environmentally friendly materials that can be recycled, disposed of, or destroyed without any hazard to the environment. To this end, packaging materials are labelled appropriately.

The symbol on the product or its packaging indicates that the product should not be treated as normal household waste. Take the product to an authorized collection centre for waste electric and electronic equipment processing.

When **disposing** of the washing machine at the end of its useful life, remove all power cords, and destroy the door latch and switch to prevent the door from locking or latching (child safety).

This appliance is marked according to the European directive on waste (WEEE).

Correct **disposal** of the product will help prevent any negative effects on the environment and health of people, which could occur in case of incorrect product removal. For detailed information on removal and processing of the product, please contact the relevant municipal body in charge of waste management, your waste disposal service, or the store where you bought the product.

TYPICAL CONSUMPTION TABLE

Programme Instructions

1.The Eco 40-60 programme is able to clean normally soiled cotton laundry declared to be washable about 40°C to 60°C together in the same cycle, and that this programme is used to assess the compliance with the EU ecodesign legislation.
2. The power consumption of the off-mode is 0.49W.
3. The most efficient programmes in terms ofenergy consumption are generally those that perform at lower temperatures and longer duration.
4. Loading the household washer dryer up to the capacity indicated by the manufacturer for the respective programmes will contribute to energy and water savings.
5.Correct use of detergent, softeners and other additives. Do not apply excessive detergent. This may affect the washing results adversely.
6. Periodic cleaning, including optimal frequency, and limescale prevention and procedure.
7. Noise and remaining moisture content are influenced by the spinning speed: the higher the spinning speed in the spinning phase the higher the noise and the lower the remaining moisture content.
8. The product information and QR code are reflected in the energy consumption labelthe product registration information can be obtained by scanning the QR code.
9. The information of standard programmes.

Program	Selected Temperature (℃)	Rated Capacity (kg)	Maximum temperature in drum(℃)	Program duration (h:min)	Energy consumption (kWh/cycle)	Water consumption (litres/cycle)	Remaining moisture content (%)	Maximum speed reached (rpm)
Eco40-60 full load	-	9.0	29	3:48	0.550	57.0	53.00	1400
Eco40-60 half load	-	4.5	26	2:54	0.440	43.0	53.00	1400
Eco40-60 1/4 load	-	2.5	24	2:39	0.230	33.0	55.00	1400
20℃	20	9.0	20	1:50	0.240	85.0	56.00	1400
Cotton	60	9.0	56	3:38	2.000	115.0	56.00	1400
Synth	40	4.5	40	2:33	0.900	80.0	38.00	1400
Quick 15'	20	1.0	20	0:15	0.050	30.0	65.00	800
Fast	40	4.5	38	0:58	0.520	50.0	50.00	1400
Fast	60	4.5	58	1:18	0.870	50.0	50.00	1400

The values given for programmes other than the Eco 40-60 programme are indicative only.

Maximum or nominal load applies to laundry prepared pursuant to the IEC 60456 standard.

Due to deviations in terms of type and amount of laundry, spinning, power supply oscillation, and environment temperature and humidity, the programme duration and power consumption values measured at the end user may differ from the ones stated in the table.

We reserve the right to any changes and errors in the instructions for use.

Your Teknix appliance comes with a 5 year parts and labour guarantee – to give you the reassurance you need when purchasing a new appliance.

Before requesting a service visit, please check the troubleshooting guide in the operating instruction booklet.

For service and repairs please contact the Teknix technical helpline on: Freephone 0800 772 0614

Telephone lines are open 09.00 – 17.30 Monday to Friday

Please have your model number and serial number available before making the call.

What is covered

- All repairs necessary as a result of faulty materials, defective components or manufacturing defect.
- The cost of all functional replacement parts.
- The labour cost of a Teknix approved repairer to carry out the repair.

What is not covered

- Transit or delivery damage.
- Accidental damage.
- Misuse, or abuse.
- Cabinet or appearance parts, including knobs.
- Accessory items, including ice trays, scrapers and cutlery baskets.
- Repairs required as a result of unauthorised repairs or incorrect installation that fails to meet the requirements contained in the operating instruction booklet.

Note

- The product is guaranteed for domestic household use only.
- Gas appliances must be installed by a Gas Safe registered Gas Installer.
- We may ask you to provide proof of purchase so we can validate the period of your Teknis guarantee.

TEKNIX

4384630-X08064324A