Montpellier

DOMESTIC APPLIANCES

LAUNDRY DISHWASHING COOKING COOLING

Installation & Operating Instructions



Built-in Washing Machine in White

MDABIWM1014

Please read these instructions carefully before attempting to install or use this appliance.
We recommend that you keep these instructions in a safe place for future reference.

Welcome

Thank you for choosing this Montpellier appliance.

Your appliance has been designed to provide you with the best combination of style, reliability and performance, to give you years of trouble-free use.

You may be familiar with a similar product, but please take the time to read these instructions carefully before installing or using your appliance to ensure that you get the most from your purchase and keep the manual for future reference.

The design and specifications are subjest to change without prior notice for product development.

Montpellier

montpellier-appliances.com

2 YEAR GUARANTEE

PARTS & LABOUR

ACROSS ALL OUR MODELS

Your appliance is covered by a comprehensive two year Parts & Labour Guarantee. In the unlikely event that you experience a problem with your appliance, you can rest assured that you are fully protected against the cost of repairs for the first 24 months. Please note that any claim must be accompanied by the model reference number, serial number and proof of purchase.

To activate your guarantee, you will need your product serial number. This can be found inside your appliance.

NB: Please make sure that you keep a copy of your original sales invoice as this will be needed if any service call is required.

There are three ways to register your Guarantee:

Online: Visit the Support page on our website and complete the online Product Registration form.

www.montpellier-appliances.com

By Post: Simply detach and fill in the form provided, attach a stamp and send it in the post. Don't forget to include your e-mail address so that we can send confirmation through to you.

By Phone: Contact our warranty registration department on 08081 961 388

Icon	Type	Meaning
	Warning	May Cause Serious Injury
	Risk of Electric Shock	Dangerous Voltage Risk
	Fire	Warning, Risk of Fire/ Flammable Materials
	Caution	Risk of Damage/ Important Information

Contents

1. Safety Instructions
1.1 General Safety Warnings 4
1.2 During Use 6
1.3 Packaging and Environment 6
1.4 Energy-Saving Tips 6

2. Technical Specifications
2.1 General Appearance 8
2.2 Technical Specifications 8

3. Installation
3.1 Removing the Transit Bolts 9
3.2 Adjusting the Feet 9
3.3 Electrical Connection 9
3.4 Water Inlet Hose Connection 10
3.5 Water Drain Connection 11

4. Control Panel Overview
4.1 Detergent Drawer 11
4.2 Sections 12
4.3 Program Dial 12
4.4 Electronic Display 12

5. Using your Washing Machine
5.1 Preparing Your Laundry 13
5.2 Loading the Machine 14
5.3 Adding Detergent 14
5.4 Operating Your Machine 15
5.5 Selecting a Programme 15
5.6 Half-Load Detection System 15
5.7 Additional Functions 15
5.8 Child Lock 17
5.9 Cancelling the Programme 17
5.10 End of Programme 17

6. Programme Table 18
6.1 End of Programme 21

7. Cleaning and Maintenance
7.1 End of Programme 22
7.2 Water Inlet Filters 22
7.3 Pump Filter 22
7.4 Detergent Drawer 23

8. Body/Drum 24

9. Troubleshooting 25

10. Automatic Fault Warnings 27

Product Fiche 28

Here for you 29

Icon	Type	Meaning
	**WARNING**	Serious injury or death risk
	**RISK OF ELECTRIC SHOCK**	Dangerous voltage risk
	**FIRE**	Warning; Risk of fire / flammable materials
	**CAUTION**	Injury or property damage risk
	**IMPORTANT / NOTE**	Operating the system correctly

DEAR CUSTOMER:

Thank you for buying this product. To ensure that you get the best results from this appliance, please take time to read through the simple instructions in this booklet. Please ensure that the packing material is disposed of in accordance with the current environmental requirements. When disposing of any old appliances please contact your local waste disposal department for advice on safe disposal. This appliance must only be used for its intended purpose.

1. Safety Instructions

Operating voltage / frequency	(220-240) V~/50Hz
Total current (A)	10
Water pressure (Mpa)	Maximum 1 Mpa / Minimum 0. 1Mpa
Total power (W)	2100
Maximum washing capacity (dry laundry) (kg)	10



Please read this user manual carefully before using your appliance and keep it for future reference.

This appliance is intended for domestic use only. Use in commercial environments will invalidate the warranty.

This manual may cover multiple models. Your appliance may differ slightly from the descriptions and illustrations provided.

WARNING: The manufacturer is not responsible for any damage or injury caused by failure to follow these instructions.

- Do not install the appliance on carpet or similar surfaces that may block ventilation underneath.
- This appliance is not intended for use by persons (including children) with reduced physical, sensory or mental capabilities, or lack of experience and knowledge, unless supervised or instructed by a responsible person.
- Children under 3 years of age must be kept away unless continuously supervised.
- If the power cord is damaged, contact an authorised service centre for replacement.
- Only use the new water inlet hose supplied with the appliance. Never reuse old or damaged hoses.
- Children must not play with the appliance.
- Cleaning and maintenance must not be carried out by children without supervision.

NOTE: For a digital copy of this manual, contact: **washingmachine@standardtest.info**

Please include the model name and 20-digit serial number (found on the appliance door).

1.1 General Safety Warnings

- The recommended ambient operating temperature is 15–25°C.
- At temperatures below 0°C, hoses may split and electronic components may malfunction.
- Ensure all laundry is free from foreign objects such as coins, nails, needles, or lighters.
- For first use, run a 90°C cotton cycle without laundry, adding detergent to compartment II.
- Add detergent and fabric softener only at the start of each wash.
- If the appliance will not be used for a long period, unplug it and turn off the water supply. Leave the door open to prevent moisture build-up.
- Some water may remain in the appliance after factory testing; this is normal.
- Keep packaging materials away from children.

- Use pre-wash programmes only for heavily soiled laundry.
- Never open the detergent drawer while the machine is running. ⚠
- In case of malfunction, unplug the appliance and turn off the water supply. Contact an authorised service agent.
- Do not exceed the maximum load capacity.
- Never force the door open during operation. ⚠
- Avoid washing items contaminated with flour, as this may damage the appliance.
- Follow the manufacturer's instructions when using detergents and fabric conditioners.
- Ensure the door can open fully without obstruction.
- Install the appliance in a well-ventilated area.

Emergency Door Opening

The door remains locked during operation or in the event of a power failure.

To open the door:

1. Switch off the appliance and unplug it.

2. To drain the waste water, refer to the pump filter section.*

3. Use a suitable tool to pull down the emergency release mechanism while gently opening the door.

4. If the door remains locked after closing again, ensure the emergency release is reset.



*For built-in models, refer to the installation manual for removing the plinth panel.

Risk of Burns

⚠ Do not touch the drain hose or discharged water during operation, as it may be extremely hot.

Risk of Electric Shock ⚠ ⚠

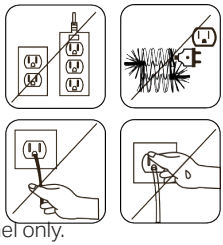

- Do not use extension leads or multiple sockets.
- Do not use damaged plugs or sockets.
- Always hold the plug when disconnecting; never pull the cable.
- Do not touch the plug or appliance with wet hands.
- If the power cable is damaged, it must be replaced by qualified personnel only.

Risk of Flooding ⚠

- Check water flow before placing the drain hose.
- Ensure the hose is securely positioned.
- Make sure the sink drain is not blocked.

Fire Hazard ⚠

- Do not store flammable substances near the appliance.
- Do not use solvent-based or paint-removing chemicals in the machine.
- Ensure laundry is free from flammable objects.

Risk of Injury ⚠



- Do not climb on the appliance.
- Ensure hoses and cables do not create a tripping hazard.
- Do not tilt or turn the appliance upside down.
- Do not lift the appliance by the door or detergent drawer.
- The appliance must be moved by at least two people.

Child Safety ⚠



- Never leave children unattended near the appliance.
- Do not allow children to touch the door during operation, as it becomes hot.
- Keep detergents and cleaning agents out of reach of children.

1.2 During Use

- Keep pets away from the appliance.
- Do not operate the appliance if it appears damaged.
- Installation must be carried out by an authorised technician.
- Only wash fabrics labelled as suitable for machine washing.
- Remove the transit bolts and spacers before first use. Failure to do so may cause damage and void the warranty.
- The warranty does not cover damage caused by external factors such as fire or flooding.
- Keep this manual for future reference and pass it on to future owners.

NOTE: Specifications may vary depending on the model.

Drive belt replacement must only be carried out by an authorised service agent using original spare parts.

1.3 Packaging and Environment

Packaging materials protect the appliance during transport and are recyclable.

Dispose of packaging responsibly to reduce environmental impact.

1.4 Energy-Saving Tips

- Do not exceed the recommended load capacity.
- Avoid using pre-wash for lightly soiled laundry.
- This helps reduce water and energy consumption.

Built-in Appliance Notes

- Built-in models must be used with a plinth sheet.
- Ensure the mains plug remains accessible after installation.

⚠ **WARNING:** The manufacturer is not responsible for any damage or injury caused by improper installation or use.

CE Declaration of Conformity

This appliance complies with applicable European Directives, regulations, and standards.

Disposal of Old Appliance



This symbol indicates that the appliance must not be disposed of with household waste.

Instead, it should be taken to an authorised collection point for the recycling of electrical and electronic equipment.

Proper disposal helps prevent harm to the environment and human health.

For further information, contact your local authority, waste disposal service, or retailer.

2. Technical Specifications

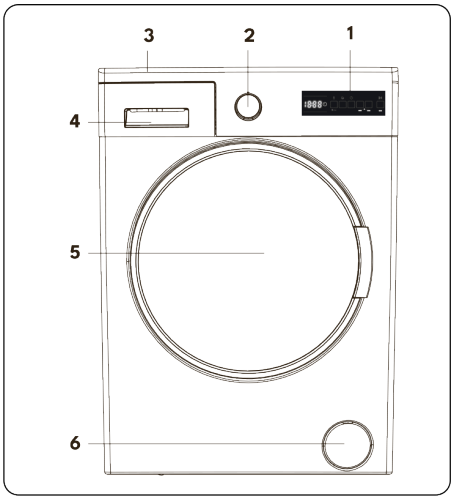

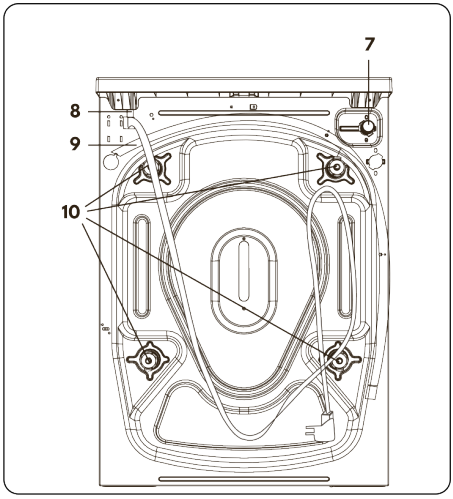

2.1 General Appearance

1. Electronic Display
2. Programme Dial
3. Upper Tray
4. Detergent Drawer
5. Drum
6. Pump Filter Cover
7. Water Inlet Valve
8. Power Cable
9. Discharging Hose
10. Transit Bolts

2.1 Technical Specifications

Operating voltage / frequency (V/Hz)	(220-240) V~/50Hz
Total current (A)	10
Water pressure (Mpa)	Maximum: 1 Mpa Minimum : 0.1 Mpa
Total power (W)	2100
Maximum dry laundry capacity (kg)	10
Spinning revolution (rev / min)	1400
Programme number	15
Dimensions (mm) **Height** **Width** **Depth**	 817.4 597.4 544.3

3. Installation

3.1 Removing the Transit Bolts

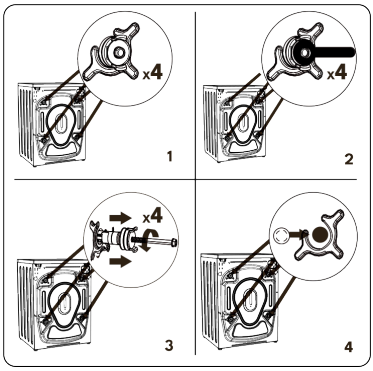

1. Before operating the washing machine, remove the 4 transit bolts and rubber spacers from the rear of the appliance.

Failure to remove these may cause excessive vibration, noise, malfunction, and will invalidate the warranty.

2. Loosen the transit bolts by turning them anticlockwise using a suitable spanner.

3. Remove the bolts by pulling them straight out.

4. Insert the plastic blanking caps (supplied in the accessories bag) into the holes left by the removed bolts.

Store the transit bolts safely for future transportation.

NOTE: The appliance must not be operated with transit bolts fitted. Any faults arising from this are not covered by the warranty.

3.2 Adjusting the Feet

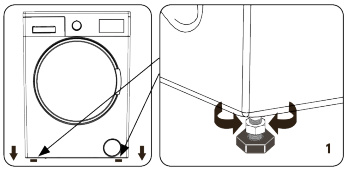

1. Do not install the appliance on soft surfaces (such as carpet) that may block ventilation at the base.

- Place the appliance on a firm, level surface to ensure quiet and stable operation.
- The appliance can be levelled using the adjustable feet.
- Loosen the locking nuts before adjustment.

2. Adjust the height:

- Turn the feet clockwise to raise the appliance.
- Turn the feet anticlockwise to lower it.

Once level, tighten the locking nuts by turning them clockwise.

3. Do not place materials such as cardboard, wood, or similar items under the appliance to level it.

- When cleaning the floor, take care not to disturb the appliance's level.

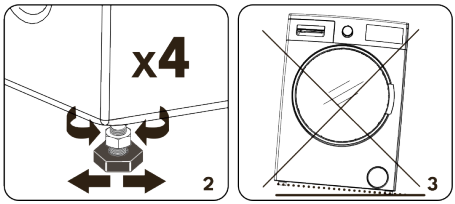

3.3 Electrical Connection

- The appliance requires a 220–240 V, 50 Hz mains supply.
- The power cable is fitted with an earthed plug, which must be connected to a properly earthed 10A socket.
- If a suitable socket is not available, a qualified electrician must carry out the necessary installation.

The manufacturer accepts no responsibility for damage caused by using an unearthed supply.

NOTE: Operating the appliance at low voltage may reduce its performance and lifespan.

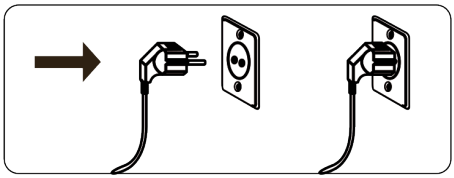

3.4 Water Inlet Hose Connection

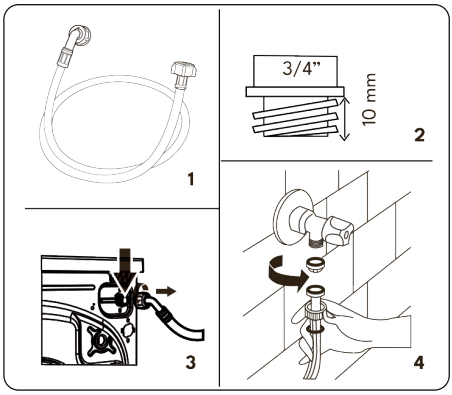

1. Depending on the model, the appliance may have:

o A single cold water inlet, or

o Dual inlets (hot and cold)

• Connect the white-capped hose to the cold water inlet.

• Connect the red-capped hose to the hot water inlet (if applicable).

Sealing washers (nuts) are supplied—fit them to the hose ends to prevent leaks.

2. Connect the hoses to a ¾" threaded tap:

• Attach the white-capped hose to the cold inlet valve on the rear of the appliance.

• Attach the red-capped hose to the hot inlet valve (if applicable).

Tighten connections by hand only. If unsure, consult a qualified plumber.

• Recommended water pressure: 0.1–1 MPa

(0.1 MPa ≈ at least 8 litres per minute from a fully open tap)

3. Turn on the water supply and check carefully for leaks.

4. Ensure hoses are not kinked, twisted, crushed, or trapped.

If applicable, the hot water supply must not exceed 70°C.

NOTE: Only use the new hoses supplied with the appliance. Do not reuse old hoses.

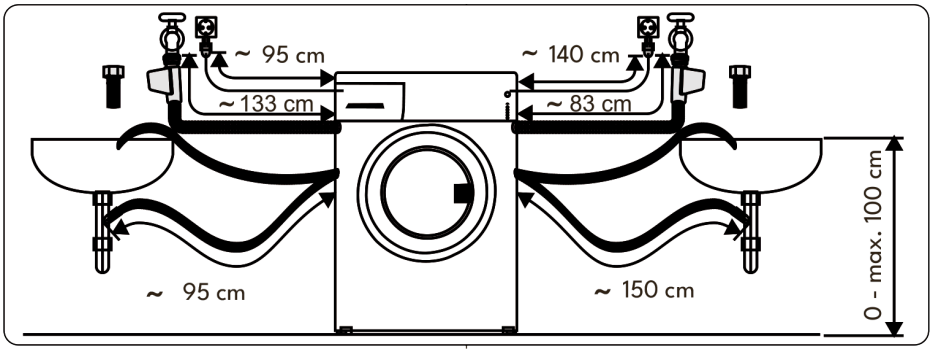

3.5 Water Drain Connection

- Connect the drain hose to a standpipe or to a sink outlet using appropriate fittings.
- Do not extend the drain hose.
- Do not place the drain hose into containers such as buckets or bathtubs.
- Ensure the hose is not bent, kinked, crushed, or blocked.
- The drain hose must be installed at a maximum height of 100 cm from the floor.

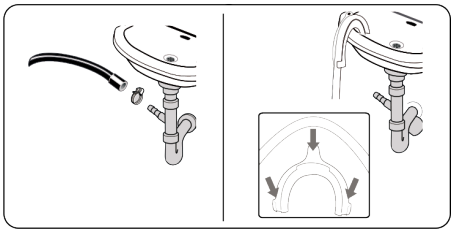

4. Control Panel Overview

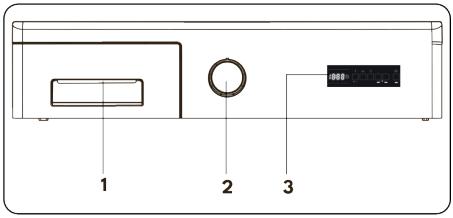

1. Detergent Drawer
2. Programme Dial
3. Electronic Display

4.1 Detergent Drawer

1. Liquid Detergent Attachments (*)
2. Main Wash Detergent Compartment
3. Softener Compartment
4. Pre-Wash Detergent Compartment
5. Powder Detergent Levels
6. Powder Detergent Scoop (*)

*Specifications may vary depending on the machine purchased.

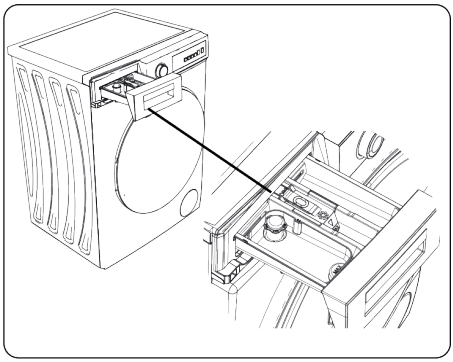

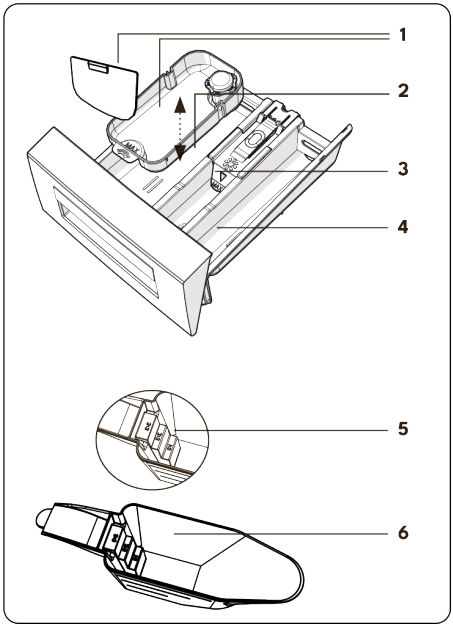

4.2 Sections

Main Wash Detergent Compartment:

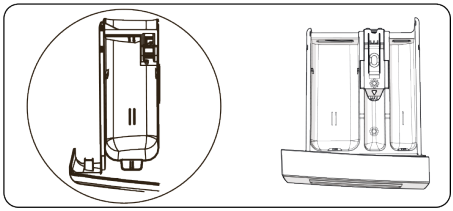

Main Wash Compartment

This compartment is used for liquid or powder detergent, or limescale remover.

A liquid detergent level plate may be supplied inside the machine (*)

Fabric Conditioner / Starch Compartment

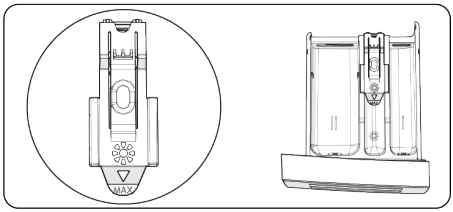

This compartment is used for fabric softener, conditioner, or starch.

- Follow the instructions provided on the product packaging.
- If residue remains after use, try diluting the softener or using a liquid alternative.

Pre-wash Detergent Compartment

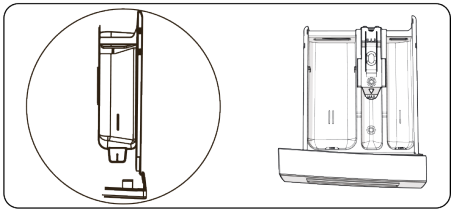

This compartment should only be used when the pre-wash function is selected.

Pre-wash is recommended for heavily soiled laundry only.

*Specifications may vary depending on the model.

4.3 Program Dial

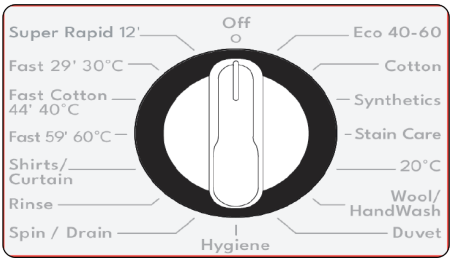

- Select the desired programme by turning the dial clockwise or anticlockwise.
- Align the marker on the dial with the required programme.
- Ensure the dial is set exactly to the selected programme.

4.4 Electronic Display

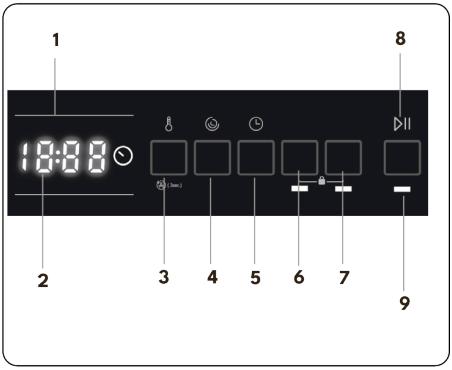

1. Electronic Display
2. Digital Display
3. Water Temperature Adjustment Button
4. RPM Speed Adjustment Button
5. Delayed Start Additional Function
6. Additional Function Button 1
7. Additional Function Button 2
8. Start / Pause Button
9. Start / Pause Button Lamp

Display Functions

- Shows delay timer (if set)
- Displays selected temperature and spin speed
- Indicates additional functions
- Displays “End” when the programme is complete
- Alerts the user if a fault occurs

5. Using Your Washing Machine

5.1 Preparing Your Laundry

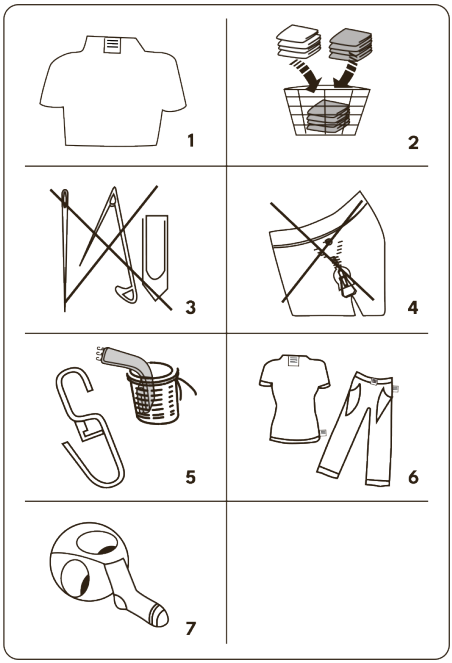

1. Follow the care instructions on garment labels.

Sort laundry by:

o Fabric type (cotton, synthetic, delicate, wool, etc.)

o Washing temperature (cold, 30°C, 40°C, 60°C, 90°C)

o Degree of soiling

2. Do not wash white and coloured items together.

Dark fabrics may release excess dye and should be washed separately.

3. Check all pockets and remove foreign objects such as coins, nails, or lighters.

⚠ **CAUTION:** Damage caused by foreign objects is not covered by the warranty.

4. Close zips and fasten hooks and buttons.

5. Remove curtain hooks or place curtains in a laundry bag.

6. Turn garments inside out.

7. Place small items (e.g. socks, handkerchiefs) in a washing net.

Can be bleached	Do not bleach	Normal washing
Maximum ironing temperature 150˚C	Maximum ironing temperature 200˚C	Do not iron
Can be dry cleaned	No dry cleaning	Dry flat
Drip dry	Hang to dry	Do not tumble dry
(F) Dry cleaning in gas oil, pure alcohol and R113 is allowed	(P) Perchloroethylene R11, R13, Petroleum	(A) Perchlorinetyhlene R11, R113, Gas oil

5.2 Loading the Machine

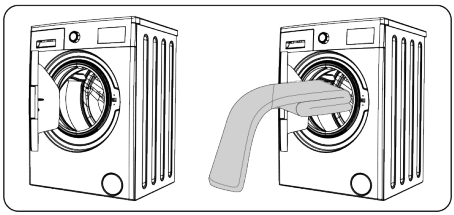

- Open the door.
- Load laundry evenly into the drum.

NOTE: Do not exceed the maximum load capacity. Overloading may reduce washing performance and increase creasing. Refer to the programme table for load limits.

LAUNDRY TYPE	WEIGHT (gr)
Towel	200
Linen	500
Bathrobe	1200
Quilt cover	700
Pillow slip	200
Underwear	100
Tablecloth	250

- Load items individually rather than in bundles.
- Ensure no items are trapped between the door seal and the door.
- Close the door gently until it clicks.

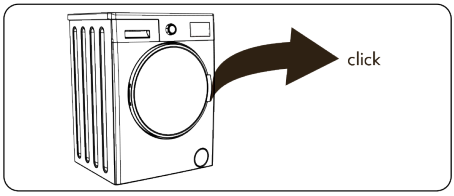

- Make sure the door is fully closed; otherwise, the programme will not start.

5.3 Adding Detergent

The amount of detergent required depends on:

- The level of soiling
- The load size
- Water hardness

Guidelines:

- For lightly soiled laundry, do not use pre-wash.

Add a small amount of detergent to compartment II.

- For heavily soiled laundry:
  - o Select a programme with pre-wash
  - o Add ¼ of the detergent to compartment I
  - o Add the remaining detergent to compartment II
- Always use detergents suitable for automatic washing machines.
- Follow the manufacturer's dosage instructions to avoid excessive foam and poor rinsing.
- In areas with hard water, more detergent may be required.
- Larger loads require more detergent.

Fabric Softener

- Add softener to the middle compartment.
- Do not exceed the MAX level.
- Thick fabric softeners may cause clogging in the detergent drawer. If necessary, dilute before use.
- Liquid detergents can be used in all programmes without pre-wash.
- To use liquid detergent:
- Insert the liquid detergent level plate (*) into the guides in compartment II.
- Use the markings on the plate to fill to the required level.

*Specifications may vary depending on the model.

5.4 Operating Your Machine

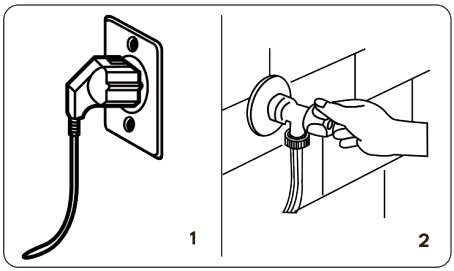

1. Plug the appliance into the mains supply.

2. Turn on the water supply.

- Open the door.
- Load the laundry evenly into the drum.
- Close the door gently until it clicks shut.

5.5 Selecting a Programme

Use the programme table to select the most suitable programme for your laundry.

5.6 Half-Load Detection System

Your appliance is equipped with a half-load detection system.

If the load is less than half the maximum capacity, the machine will automatically:

- Reduce programme duration
- Use less water
- Consume less energy

This function operates automatically, regardless of the selected programme.

5.7 Additional Functions

1. Temperature Selection

Use the water temperature adjustment button to alter the automatically programmed temperature.

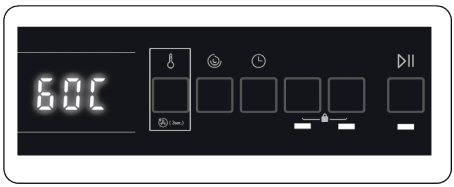

- The maximum temperature for the selected programme is set automatically.
- Press the temperature adjustment button to reduce the temperature step-by-step down to cold wash (– – °C).

Drum Cleaning Function:

- Press and hold the temperature button for 3 seconds.
- Use without laundry.

Use a suitable washing machine cleaner or descaler.

- Recommended frequency: once per month.

2. Spin Speed Selection

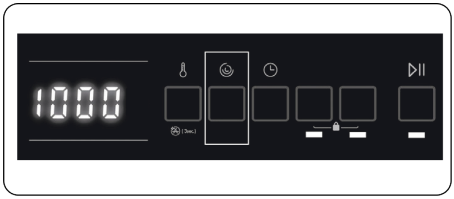

- The maximum spin speed is set automatically.
- Press the spin speed button to adjust or reduce the speed.
- Continue pressing to cycle through available options, including no spin.

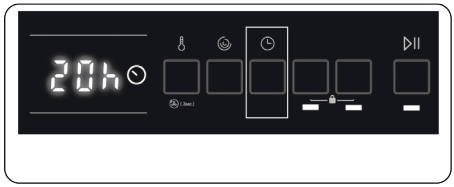

3. Delay Timer

Use this function to delay the start of the programme by 1 to 23 hours.

To set:

- Press the delay button once (“01h” will appear).
- will light up on the electronic display.
- Press repeatedly until the desired delay time is displayed.
- Press Start/Pause to activate.

To cancel delay timer:

• If the programme has started: press the delay button once. will go off on the electronic display.

• If not started: press the delay button repeatedly until the disappears from the electronic display.

NOTE: If you attempt to select an additional function and the corresponding indicator light does not illuminate, this means the function is not available for the selected washing programme.

4. Anti-Allergic (*)

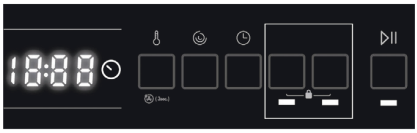

Auxiliary function button 4 or 5 Anti- Allergic

Adds an extra rinse cycle using hot water.

Recommended for:

• Baby clothes

• Sensitive skin

• Underwear

5. Easy Ironing (*)

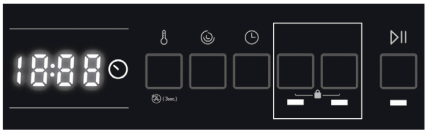

Auxiliary function button 4 or 5 Easy Ironing

Reduces creasing in laundry at the end of the cycle.

To select this function, press the Easy Ironing button when the is displayed.

6. Pre-Wash (*)

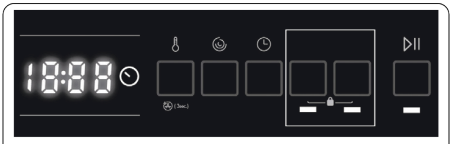

Auxiliary function button 4 or 5 Pre-Wash

Adds a pre-wash stage for heavily soiled laundry.

Add detergent to compartment I.

To select this function, press the Pre-Wash button when the is displayed.

7. Extra Rinse (*)

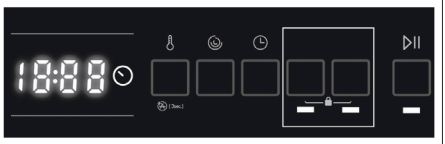

Auxiliary function button 4 or 5 Extra Rinse

Adds an additional rinse at the end of the programme.

To select this function, press the Extra Rinse button when the is displayed.

8. Rapid Wash (*)

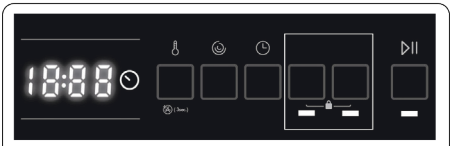

Auxiliary function button 4 or 5 Rapid Wash

Reduces washing time, energy, and water consumption.

Recommended for small loads (less than half capacity).

To select this function, press the Rapid Wash button when the is displayed.

Note: The half-load function may activate automatically for small loads.

(*) *Specifications may vary depending on the model

Start/Pause Button

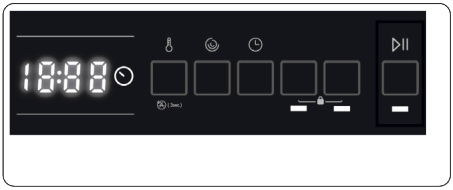

- Press to start or pause the selected programme.
- When paused, the indicator light will flash.

5.8 Child Lock

The Child Lock prevents accidental changes to the programme.

To activate:

- Press and hold buttons 4 and 5 simultaneously for 3 seconds.

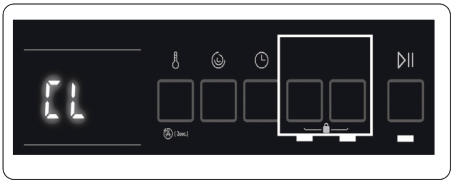

- "CL" will appear on the display.

While active:

- Any button press or dial movement will display "CL".
- The current programme will continue uninterrupted.

To deactivate:

- Press and hold the same buttons for 3 seconds until "CL" disappears.

5.9 Cancelling a Programme

To cancel a running programme:

1. Turn the programme dial to the "STOP" position.
2. The machine will stop and cancel the programme.
3. Select a drain programme if necessary.
4. Once drained, a new programme can be selected.

5.10 End of Programme

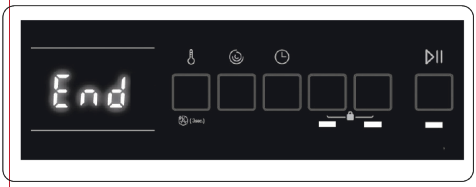

When the programme is complete:

- "END" will appear on the display.
- Open the door and remove the laundry.
- Leave the door open to allow the drum to dry.
- Turn the programme dial to the STOP position.
- Unplug the appliance.
- Turn off the water supply.

6. Programme Table

Programme	Washing temperature (°C)	Maximum dry laundry amount (kg)	Detergent compartment	Programme duration (Min.)	Laundry type / Descriptions
ECO 40-60	*40 - 60	10,0	2	239	Dirty cotton and flax textiles. (Underwear, linen, tablecloth, towel (maximum 5 kg), bedclothes, etc.)
COTTON	*60 - 40 - 30 - “- -C” - 90 - 80 - 70	10,0	2	110	Very dirty, cotton and flax textiles. (Underwear, linen, tablecloth, towel (maximum 5 kg), bedclothes, etc.)
SYNTHETICS	*40 - 30 - “- -C”	4,0	2	135	Dirty or synthetic-mixed textiles. (Nylon socks, shirts, blouses, synthetic-including trousers etc.)
STAIN CARE	* 60 - 50 - 40 - 30 - “- -C”	4,0	1&2	122	Very dirty cotton and flax textiles. (Underwear, linen, tablecloth, towel, bedclothes etc.)
20°C	*20 - “- -C”	5,0	2	59	Less dirty, cotton and linen textiles. (Underwear, bedsheet, tablecloth, etc.)
WOOL / HAND WASH	*30 - “- -C”	2,0	2	54	Woollen laundries with machine wash labels. / Laundry recommended for hand wash or sensitive laundry.
DUVET	*40 - 30 - “- -C”	-	2	87	For washing a fibre duvet with a machine washable label. (max. 3 kg)
HYGIENE	*30 - “- -C” - 60 - 50 - 40	5,0	2	78	Baby laundry (With the 30°C temperature selection, you can ensure hygiene on your laundry. With the 60°C temperature selection, you can provide a more intensive wash and hygiene)
SPIN/DRAIN	**“- -C”	10,0	-	15	You can use this program for any type of laundry if you want an additional spin step after the washing cycle./ You can use the drain program to drain the water accumulated inside the machine (adding or removing laundry). To enable the drain program, turn the program knob to the spin/drain program. After you select “spin cancelled” using the auxiliary function key, the program will start to run.
RINSE	**“- -C”	10,0	-	24	Provides an additional rinse to any type of laundry after the washing cycle.
SHIRTS / CURTAIN	*40 - 30 - “- -C”	4	2	77	Wash Curtains and Shirts in this program. (The maximum load for washing curtains should be 2 kg.)
FAST 59’ 60°C	* 60 - 40 - 30 - “- -C”	10,0	2	59	The quick wash program cleans your lightly soiled light-coloured and white laundry in just 59 minutes at selectable temperatures up to 60°C. The ability of the program to operate at selectable temperatures provides cleaning suitable for various types of fabric, while the ability of the program to wash laundry up to the full capacity of the machine allows you to wash large amounts of laundry easily. Additionally, you can wash your colored and dark colored laundry by reducing the temperature.

Programme	Washing temperature (°C)	Maximum dry laundry amount (kg)	Detergent compartment	Programme duration (Min.)	Laundry type / Descriptions
FAST COTTON 44' 40°C	*40 - 30 - "- -C" - 60	10,0	2	44	The quick wash program cleans your lightly soiled or unspotted colored laundry in just 44 minutes at selectable temperatures up to 40°C. Flexible temperature options provide cleaning suitable for various fabric types, while the machine's ability to wash laundry up to its full capacity allows you to easily clean large amounts of laundry.
FAST 29' 30°C	*30 - "- -C"	5,0	2	29	The quick washing program helps you save time by cleaning your lightly soiled or unspotted black and/or dark colored laundry in just 29 minutes at selectable temperatures up to 30°C. You can quickly wash your lightly soiled or unspotted black or dark colored laundry at half the capacity of the machine and complete your daily cleaning routine in a practical way.
(**) Super Rapid 12 min.	*30 - "- -C"	2,0	2	12	The quick washing program allows you to save time by cleaning your lightly soiled or unspotted black or dark colored laundry in a very short time, such as 12 minutes, at selectable temperatures up to 30°C. With this program, you can quickly wash up to a maximum of 2 kg of laundry. This program provides great convenience, especially in emergency situations or when quick cleaning is required.

NOTE: Programme duration may vary depending on the load size, water supply, ambient temperature, and any additional functions selected.

(*) The washing temperature stated for the programme is the factory default setting.

(**) Due to the short duration of this programme, we recommend using less detergent. If an unbalanced load is detected, the programme may run for longer than 12 minutes. The door can be opened 2 minutes after the programme has finished (this 2-minute period is not included in the total programme time).

The Eco 40–60 programme is designed to clean normally soiled cotton laundry labelled as washable at 40°C or 60°C in the same cycle. This programme is used to assess compliance with EU ecodesign legislation.

NOTE: If settings are changed after selecting a programme, temperature and spin speed values may also change. Always check the settings before starting the machine.

• The most energy-efficient programmes generally operate at lower temperatures and run for longer durations.

• Running the washing machine at full load capacity, as specified by the manufacturer, helps reduce both water and energy consumption.

• Programme duration, energy use, and water consumption may vary depending on load size and type, selected additional functions, water hardness, and ambient temperature. Under EU Ecodesign regulations, values provided for programmes other than Eco 40–60 are indicative only.

• Liquid detergent is recommended for low-temperature programmes. The amount of detergent required depends on the load size and level of soiling. Always follow the detergent manufacturer's instructions.

• Noise levels and remaining moisture content are affected by spin speed. Higher spin speeds result in increased noise but lower residual moisture.

• Product information can be accessed via the QR code on the energy label.

Programme Name	Rated Capacity kg	Energy Consumption kWh/cycle			Programme Duration Hours:Minutes			Water Consumption Litres/Cycle			max. Temperature ˚C			Remaining Moisture Content % 1400 Rpm		
		Rated Capacity	1/2 Load	1/4 Load	Rated Capacity	1/2 Load	1/4 Load	Rated Capacity	1/2 Load	1/4 Load	Rated Capacity	1/2 Load	1/4 Load	Rated Capacity	1/2 Load	1/4 Load
Cotton 90	10	2,080			02:53			98,0			81			53%		
Cotton 60	10	1,010			01:50			47,0			60			53%		
Eco 40-60	10	0,891	0,331	0,133	03:59	03:00	03:00	69,9	40,6	34,0	37	27	24	53%	53%	53%
Synthetics	4	1,150			02:15			70,0			45			53%		
Fast Cotton 44'	10	0,480			00:44			39,0			40			62%		
20˚C	5	0,080			00:59			34,0			20			53%		

6.1 End of Programme

• Use only detergents, softeners, and other additives suitable for automatic washing machines. Excessive detergent may cause over-foaming. If this occurs, the foam control system will be activated.

• We recommend cleaning the washing machine thoroughly every two months. Use the Drum Clean programme where available. If your machine does not have this programme, run the Cottons 90°C cycle instead. When necessary, use limescale removers specifically designed for washing machines.

• Never force the door open while the washing machine is in operation. The door can be opened approximately 2 minutes after the wash cycle has finished.*

• Do not attempt to open the door before the cycle has completed. It will unlock automatically once the programme ends.*

• Installation and repairs must always be carried out by an authorised service agent to avoid potential risks. The manufacturer is not liable for any damage resulting from work performed by unauthorised persons.

(*) Specifications may vary depending on the model purchased.

7. Cleaning and Maintenance

7.1 End of Programme

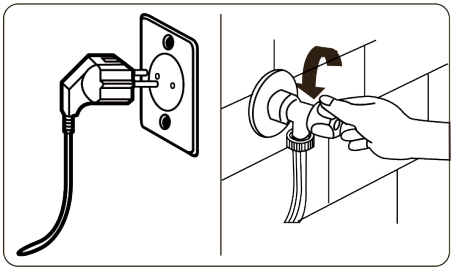

Switch off the mains power supply and remove the plug from the socket before carrying out any maintenance or cleaning.

Turn off the water supply before starting any maintenance or cleaning procedures.

CAUTION: Do not use solvents, abrasive cleaners, glass cleaners, or multi-purpose cleaning agents to clean your washing machine. These may damage plastic surfaces and other components due to the chemicals they contain.

7.2 Water Inlet Filters

Water inlet filters prevent dirt and foreign particles from entering the machine. If your machine is not receiving sufficient water, even though the water supply is on and the tap is open, the filters may need cleaning. We recommend cleaning the water inlet filters every 2 months.

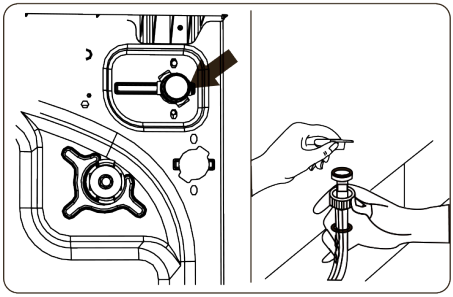

- Unscrew the water inlet hose(s) from the washing machine.
- To remove the filter from the water inlet valve, use long-nosed pliers to gently pull the plastic tab.
- A second filter is located at the tap end of the inlet hose. Remove it in the same way using long-nosed pliers.
- Clean both filters thoroughly with a soft brush, then wash with soapy water and rinse well. Reinsert them carefully by pushing them back into place.

CAUTION: Filters may become clogged due to poor water quality or lack of maintenance and may eventually fail, potentially causing water leaks. Such faults are not covered by the warranty.

7.3 Pump Filter

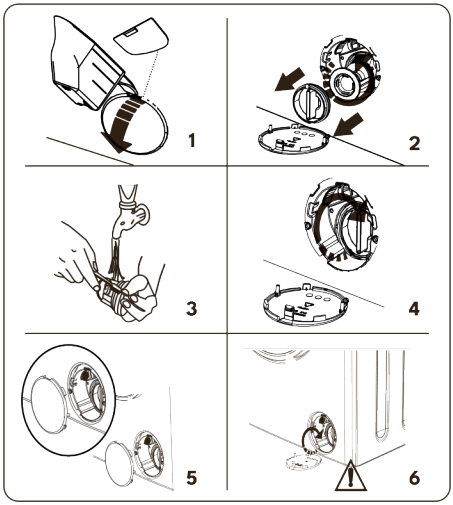

The pump filter system helps extend the life of the pump by preventing lint and foreign objects from entering the machine. We recommend cleaning the pump filter every 2 months.

The pump filter is located behind the cover at the lower right corner on the front of the machine.

To clean the pump filter:

1. Open the pump cover using the washing powder scoop (*) or the liquid detergent level plate.

2. Insert the end of the scoop or plate into the opening and gently press backwards to release the cover.

3. Place a container beneath the filter cover to collect any residual water.

4. Turn the filter anticlockwise and pull it out. Allow any remaining water to drain.

NOTE: You may need to empty the container several times depending on the amount of water.

5. Remove any debris from the filter using a soft brush.

6. Refit the filter by inserting it and turning it clockwise until secure.

7. Close the pump cover, ensuring the internal clips align correctly with the front panel.

WARNING: Water inside the pump may be hot. Allow it to cool before carrying out cleaning or maintenance.

(*) Specifications may vary depending on the model.

(**) Built-in models may use a plinth panel instead of a pump cover. Refer to the built-in installation manual for removal instructions.

7.4 Detergent Drawer

Detergent residue may build up in the drawer over time. We recommend cleaning it every 2 months.

To remove and clean the detergent drawer:

- Pull the drawer out fully.

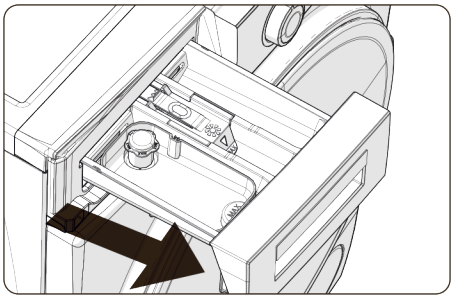

- Press the release tab inside the drawer and pull it out completely.

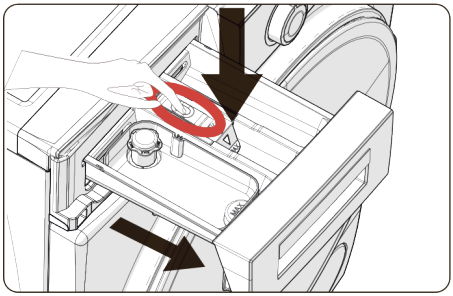

- Remove the flush stopper and clean all parts thoroughly to remove any residue.
- Rinse with water and a soft brush.

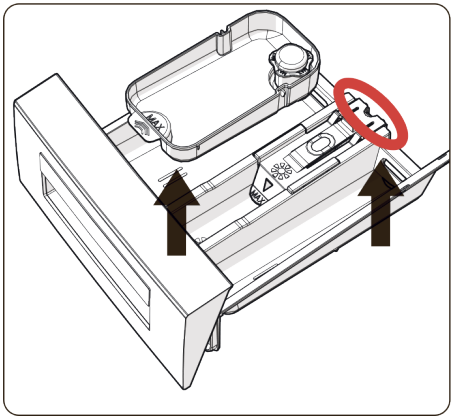

- Clean any residue from inside the drawer housing to prevent it from entering the machine.
- Dry all parts with a cloth and reassemble, ensuring the flush stopper is correctly positioned.

Note: Do not clean the detergent drawer in a dishwasher.

Liquid detergent insert (*):

Remove the insert, clean off any detergent residue, and refit it. Ensure no residue remains in the siphon.

(*) Specifications may vary depending on the model.

8. Body / Drum

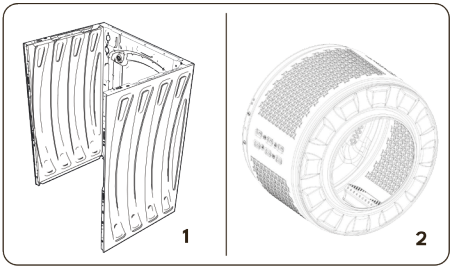

1. Outer casing

Clean with a mild, non-abrasive cleaner or soapy water. Wipe dry with a soft cloth.

2. Drum

Do not leave metallic objects (e.g. coins, paper clips, needles) inside the drum, as they may cause rust stains.

To remove rust stains, use a non-chlorine cleaner and follow the manufacturer's instructions.

Do not use wire wool or abrasive materials.

9. Troubleshooting

Repairs must be carried out by an authorised service centre. If a fault occurs or you cannot resolve an issue using this guide:

- Disconnect the appliance from the mains supply.
- Turn off the water supply.

(*) Refer to the maintenance and cleaning section.

(**) Refer to the installation section.

FAULT	POSSIBLE CAUSE	TROUBLESHOOTING
Your machine does not start.	Machine not plugged in.	Plug machine in.
	Fuses are faulty.	Replace the fuses.
	No mains power supply.	Check mains power.
	Start/Pause button not pressed.	Press the Start/Pause button.
	Programme dial 'stop' position.	Turn the programme dial to the desired position.
	The machine door is not completely closed.	Close the machine door.
Your machine does not intake water.	Water tap is turned off.	Turn tap on.
	Water inlet hose may be twisted.	Check water inlet hose and untwist.
	Water inlet hose clogged.	Clean water inlet hose filters. (*)
	Inlet filter clogged.	Clean the inlet filters. (*)
	The machine door is not completely closed.	Close the machine door.

FAULT	POSSIBLE CAUSE	TROUBLESHOOTING
Your machine does not discharge water.	Drain hose clogged or twisted.	Check the drain hose, then either clean or untwist.
	Pump filter clogged.	Clean the pump filter. (*)
	Laundry is too tighly packed together in the drum.	Spread your laundry in the machine evenly.
Your machine vibrates.	The feet have not been adjusted.	Adjust the feet. (**)
	Transit bolts fitted for transportation have not been removed.	Remove the transit bolts from the machine. (**)
	Small load in the drum.	This will not prevent operation of your machine.
	Your machine is overloaded with laundry or laundry is unevenly spread.	Do not overload the drum. Spread laundry evenly in the drum.
Excessive foam is formed in the detergent drawer.	Excessive amount of detergent used.	Press the Start/Pause button. To stop the foam, dilute one tablespoon of softener into 1/2 litre of water and pour into the detergent drawer. Press the Start/Pause button after 5-10 mins.
	Wrong detergent used.	Only use detergents produced for automatic Washing Machines.
Unsatisfactory washing result.	Your washing is too dirty for the programme selected.	Use the information in the programme tables to select the most appropriate programme.
	Amount of detergent used insufficient.	Use the amount of detergent as instructed on the packaging.
	There is too much laundry in your machine.	Check that the maximum capacity for the selected programme has not been exceeded.
Unsatisfactory washing result.	Hard water.	Increase the amount of detergent following the manufacturer's instructions.
	Your laundry is too tightly packed together in the drum.	Check that your laundry is spread out.
As soon as the machine is loaded with water, water discharges.	The end of water drain hose is too low for the machine.	Check that the drain hose is at a suitable height. (**) .
No water appears in the drum during washing.	No fault. Water is in the unseen part of the drum.	. . . . .
Laundry has detergent residue.	Non-dissolving particles of some detergents may appear on your laundry as white spots.	Perform an extra rinse, or clean your laundry with a brush after it dries.
Grey spots appear on the laundry.	There is untreated oil, cream or ointment on your laundry.	Use the amount of detergent as instructed on the packaging in the next wash.
The spin cycle does not take place or takes place later than expected.	No fault. The Unbalanced load control system has been activated.	The Unbalanced load control system will try to spread your laundry. The spinning cycle will begin once your laundry is spread. Load the drum evenly for the next wash.

(*) See the chapter regarding maintenance and cleaning of your machine.

(**) See the chapter regarding installation of your machine.

10. Automatic Fault Warnings

Your washing machine is equipped with a fault detection system, indicated by flashing indicator lights.

Refer to the table below for the most common fault codes and recommended actions.

TROUBLE CODE	POSSIBLE FAULT	WHAT TO DO
E01	The door of your machine is not shut properly.	Shut the door properly until you hear a click. If your machine persists to indicate fault, turn off your machine, unplug it and contact the nearest authorised service agent immediately.
E02	The water pressure or the water level inside the machine may be low.	Check the tap is fully turned on. Mains water may be cut-off. If the problem still continues, your machine will stop after a while automatically. Unplug the machine, turn off your tap and contact the nearest authorised service agent.
E03	The pump is faulty or pump filter is clogged or electrical connection of the pump is faulty.	Clean the pump filter. If the problem persists, contact the nearest authorised service agent. (*)
E04	Your machine has excessive amount of water.	Your machine will discharge water by itself. Once the water has drained, turn off your machine and unplug it. Turn off the tap and contact the nearest authorised service agent.

(*) Refer to the maintenance and cleaning section.

Here For You

Here For You

After-sales assistance
If you continue to experience problems with your appliance, please call the Montpellier customer service helpline on: 03333 234473 opt 3

Please have all your product details available, including the model number, serial number, original sales invoice (clearly showing model number, date of purchase and your retailer's details) before registering a fault.

The service call cannot progress without this information.

Your 2 year Manufacturer's guarantee

THIS DOES NOT AFFECT YOUR STATUTORY RIGHTS.

Your new Montpellier appliance carries a free guarantee which protects you against the cost of repairs during the first 24 months from date of purchase provided that:

Any claim is accompanied by evidence of the model reference, model serial number and proof of purchase, such as a Sales Receipt, showing that the appliance was purchased within the 24 months prior to the date of claim.

What is not covered under the Guarantee

- Any appliance not correctly installed and operated in accordance with the manufacturer's instructions
- Any appliance that is used for anything other than domestic purposes.
- Any defect caused by accident, misuse, unauthorised modification or inexpert repair.
- Cost of Call-out where a fault cannot be found with the appliance. Cost of Call-out for work covering routine maintenance, such as, but not exclusively, cleaning of filters or defrosting.
- Cost of Call-out for work required to correct the alignment of doors following door reversal procedures carried out by you. Use of the appliance by anyone other than the Householder. Use in any commercial environment.
- Consumable items, such as, but not exclusively, fuses in plugs, bulbs and breakable items which require routine replacement. Repair costs incurred that have not been authorised by Montpellier service and/or carried out by a non-approved Montpellier engineer.
- Montpellier Appliances do not accept claims for consequential loss, rusting, corroding, delivery damage or scratches.

YOUR GUARANTEE IS VALID ONLY IN THE UK & THE REPUBLIC OF IRELAND

To register your appliance simply complete the card in your appliance pack and return it with a stamp affixed or alternatively you can register online at:

montpellier-appliances.com/support

...or by phone, call our warrenty registration department on **08081 961 388**

SERVICE HELP -LINE
Should your appliance develop a fault, please call the Montpellier customer service helpline on:

03333 234473 opt 3

Please remember to have all your product details available, including the model number, serial number, date of purchase and your retailer's details before registering a fault.

Montpellier Domestic Appliances Ltd.

Unit 1, Tewkesbury Retail Park, Northway Lane,
Tewkesbury, Gloucestershire GL20 8UY

www.montpellier-appliances.com



The symbol on the product or on its packaging indicates that this product may not be treated as household waste. Instead it shall be handed over to the applicable collection point for the recycling of electrical and electronic equipment. By ensuring this product is disposed of correctly, you will help prevent potential negative consequences for the environment and human health, which could otherwise be caused by inappropriate waste handling of this product. For more detailed information about recycling of this product, please contact your local city office, your household waste disposal service or the shop where you purchased the product.