Series 8, Built-in microwave oven, 60 x 45 cm, Black
CEG732XB1B

The compact microwave 45cm. Inverter Technology: constant microwave power for heating food gradually. Microwave Boost Function: quick and easy warming.

- **Digital Control Ring**: simple and intuitive oven control.
- **TFT Touch Display**: intuitive control with the Digital Control Ring and TFT touchscreen.
- **AutoPilot 10**: every dish is a perfect success thanks to 10 pre-set automatic programmes.
- **White LCD display control**: easy-to-use thanks to direct access to additional functions, temperature recommendation and temperature indication.
- **Cleaning Assistance**: less cleaning effort

Technical Data

Type of micro-wave oven:	MW only
Type of control:	Electronic
Dimensions:	455x594x564 mm
Cavity dimensions:	245.0 x 430 x 350 mm
Length electrical supply cord:	150 cm
Net weight:	27.0 kg
Gross weight:	30.0 kg
EAN code:	4242005322725
Max. microwave power level[1]:	1000 W
Connection rating:	3010 W
Fuse protection:	16 A
Voltage:	220-240 V
Frequency:	50 Hz
Plug type:	fixed connection (electrical connection by electrician)
Included accessories:	1 x plug-in grid

4 242005 322725

[1] Intelligent inverter technology: maximum output power will be regulated to 600 W when used in longer operation

Series 8, Built-in microwave oven, 60 x 45 cm, Black
CEG732XB1B

The compact microwave 45cm. Inverter Technology: constant microwave power for heating food gradually. Microwave Boost Function: quick and easy warming.

Features

- Maximum microwave power level: 1000 W and the following options 1000 W, 180 W, 360 W, 600 W, 90 W
- Intelligent microwave inverter technology: For optimised results maximum output power will be regulated to 600 W when used in longer operation for gentler cooking.
- 1.9 KW grill function
- Grill and microwave power levels 90 W, 180 W, 360 W, 600 W combinable

Design

- stainless steel, Glass base
- Touch controls With steel trim
- Touch key operation

Cleaning

- hydrolyse program

Programmes/functions

- Electronic clock timer
- User-friendly electronics: extremely
- easy and comfortable operation
- AutoPilot, 10
- 3 defrost and 4 cooking programmes in microwave function
- Quick Start Button: one tap to maximum microwave power for 30 seconds
- LED light
- Cavity volume: 36 l
- Drop down door, SoftClose

Accessories

- 1 x plug-in grid

Features

- Automatic safety switch off
- Start button
- Door contact switch
- Integral cooling fan

Technical information

- Power cord length 150 cm Cable length
- Total connected load electric: 3.01 KW
- Nominal voltage: 220 - 240 V
- installation in tall housing

Performance/technical information

- Appliance dimension (hxwxd): 455 mm x 594 mm x 564 mm
- Niche dimension (hxwxd): 450 mm - 450 mm x 560 mm - 560 mm x 550 mm
- “For-details-on-installation-and-ventilation requirements – please refer to the installation manual prior to fitting.”

Series 8, Built-in microwave oven, 60 x 45 cm, Black
CEG732XB1B

Measurements in mm

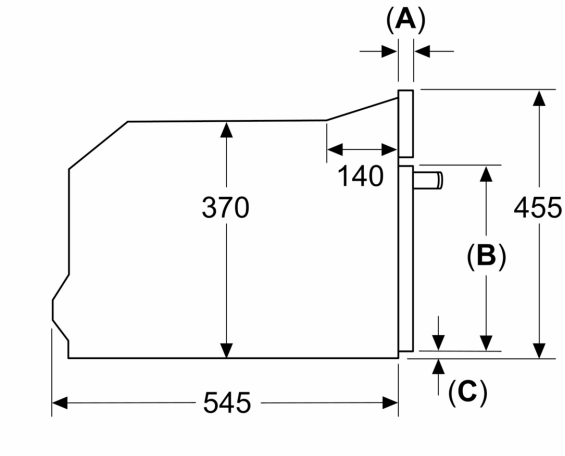

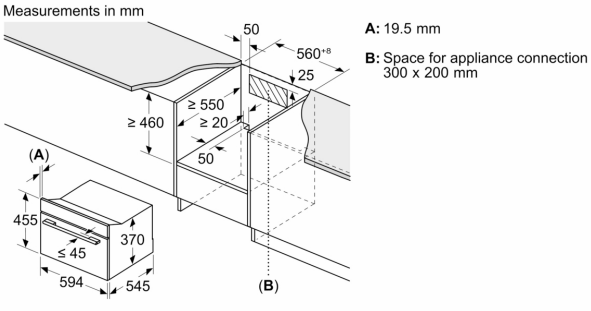
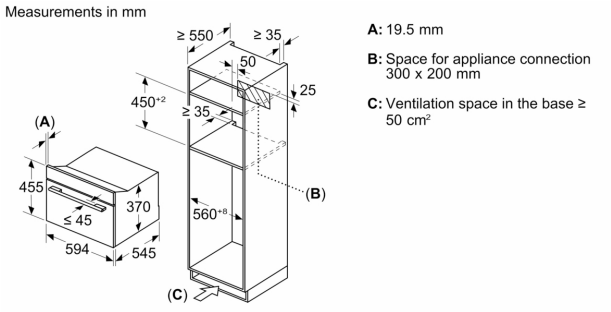
A: 19.5 mm
B: ≤ 347.5 mm
C: 7.5 mm