BOSCH

Register your new device on MyBosch now and get free benefits: **bosch-home.com/welcome**

MyBosch

Washing machine

WGG244F9GB

[en] User manual and installation instructions

Further information and explanations are available online:

Table of contents

1 Safety 4
1.1 General information 4
1.2 Intended use 4
1.3 Restriction on user group 4
1.4 Safe installation 5
1.5 Safe use 7
1.6 Safe cleaning and maintenance 9

2 Preventing material damage 10

3 Environmental protection and saving energy 11
3.1 Disposing of packaging 11
3.2 Save energy and conserve resources 11
3.3 Energy saving mode 11

4 Installation and connection 12
4.1 Unpacking the appliance 12
4.2 Contents of package 12
4.3 Requirements for the installation location 12
4.4 Removing the transit bolts 13
4.5 Connecting the appliance 14
4.6 Aligning the appliance 15

5 Before using for the first time .. 16
5.1 Starting an empty washing cycle 16

6 Familiarising yourself with your appliance 18
6.1 Appliance 18
6.2 Detergent drawer 18
6.3 Control panel 19

7 Display 20

8 Buttons 23

9 Programmes 25

10 Accessories 29

11 Laundry 29
11.1 Preparing the laundry 29

12 Detergents and care products 30

13 Basic operation 30
13.1 Switching on the appliance ... 30
13.2 Setting a programme 30
13.3 Adjusting the programme settings 30
13.4 Loading laundry 30
13.5 Starting the programme 31
13.6 Soaking laundry 31
13.7 Adding laundry 31
13.8 Cancelling the programme 31
13.9 Resuming the programme when the programme status is Rinse Hold 31
13.10 Unloading the laundry 32
13.11 Switching off the appliance 32

14 Childproof lock 32
14.1 Activating the childproof lock 32
14.2 Deactivating the childproof lock 32

15 Intelligent dosing system 32
15.1 Pouring liquid detergent and fabric softener into the dispensers 33

15.2 Using the manual dosing compartment 33
15.3 Setting the basic dosage amount 34

16 Basic settings..... 34
16.1 Overview of the basic settings..... 34
16.2 Changing the basic settings..... 34

17 Cleaning and servicing..... 35
17.1 Cleaning the drum..... 35
17.2 Cleaning the detergent drawer..... 35
17.3 Cleaning the drain pump..... 37

18 Troubleshooting..... 40
18.1 Emergency release 51

19 Transportation, storage and disposal 51
19.1 Removing the appliance 51
19.2 Inserting the transit bolts..... 51
19.3 Using the appliance again 51
19.4 Disposing of old appliance ... 52

20 Customer Service..... 52
20.1 Product number (E-Nr.) and production number (FD)..... 52

21 Consumption values..... 53

22 Technical data 54

1 Safety

Observe the following safety instructions.

1.1 General information

- Read this instruction manual carefully.
- Keep the instruction manual and the product information safe for future reference or for the next owner.
- Do not connect the appliance if it has been damaged in transit.

1.2 Intended use

Only use this appliance:
- for washing machine-washable fabrics and hand-washable wool in accordance with the care label.
- with tap water and commercially available detergents and care products suitable for washing machines.
- in private households and in enclosed spaces in a domestic environment.
- up to an altitude of max. 4000 m above sea level.

1.3 Restriction on user group

This appliance may be used by children aged 8 or over and by people who have reduced physical, sensory or mental abilities or inadequate experience and/or knowledge, provided that they are supervised or have been instructed on how to use the appliance safely and have understood the resulting dangers.
Do not let children play with the appliance.
Cleaning and user maintenance must not be performed by children unless they are being supervised.
Keep children under the age of 3 years and pets away from the appliance.

1.4 Safe installation

⚠ WARNING – Risk of electric shock!

Incorrect installation is dangerous.

- Connect and operate the appliance only in accordance with the specifications on the rating plate.
- Connect the appliance to a power supply with alternating current only via a properly installed socket with earthing.
- The protective conductor system of the domestic electrical installation must be properly installed. The installation must have a sufficiently large cross section.
- When using a residual current circuit breaker, only use a type with the ⊟ mark.
- Never equip the appliance with an external switching device, e.g. a timer or remote control.
- When the appliance is installed, the mains plug of the power cord must be freely accessible. If free access is not possible, an all-pole isolating switch must be installed in the permanent electrical installation according to the installation regulations.
- When installing the appliance, check that the power cable is not trapped or damaged.

If the insulation of the power cord is damaged, this is dangerous.

- Never let the power cord come into contact with hot appliance parts or heat sources.
- Never let the power cord come into contact with sharp points or edges.
- Never kink, crush or modify the power cord.

⚠ WARNING – Risk of fire!

It is dangerous to use an extended power cord and non-approved adapters.

- Do not use extension cables or multiple socket strips.
- Only use adapters and power cords approved by the manufacturer.
- If the power cord is too short and a longer one is not available, please contact an electrician to have the domestic installation adapted.

⚠ WARNING – Risk of injury!

The high weight of the appliance may result in injury when lifted.

- Do not lift the appliance on your own.

If this appliance is not correctly installed in a washer-dryer stack, the installed appliance may fall.

- Only stack the dryer on a washing machine using the connection kit from the dryer manufacturer . No other installation method is permitted.
- Do not install the appliance in a washer-dryer stack if the dryer manufacturer does not offer a suitable connection kit.
- Do not install appliances from different manufacturers and with varying depths and widths in a washer-dryer stack.
- Do not install a washer-dryer stack on a platform; the appliances may tip over.

⚠ WARNING – Risk of suffocation!

Children may put packaging material over their heads or wrap themselves up in it and suffocate.

- Keep packaging material away from children.
- Do not let children play with packaging material.

⚠ CAUTION – Risk of injury!

The appliance may vibrate or move when in use.

- Place the appliance on a clean, even, solid surface.
- Align the appliance using the appliance feet and a spirit level.

If hoses and power cords have been laid incorrectly, this causes a tripping hazard.

- Lay hoses and power cords in such a way that there is no risk of tripping.

If the appliance is moved by holding onto protruding components, such as the appliance door, the parts may break off.

- Do not move the appliance by holding onto protruding parts.

⚠ CAUTION – Risk of cutting!

Touching sharp edges on the appliance may lead to cuts.

- Do not touch the sharp edges on the appliance.

- Wear protective gloves when installing and transporting the appliance.

1.5 Safe use

⚠ WARNING – Risk of electric shock!

If the appliance or the power cord is damaged, this is dangerous.

- Never operate a damaged appliance.
- Never pull on the power cord to unplug the appliance. Always unplug the appliance at the mains.
- If the appliance or the power cord is damaged, immediately unplug the power cord or switch off the fuse in the fuse box and turn off the water tap.
- Call customer services. → *Page 52*

An ingress of moisture can cause an electric shock.

- Only use the appliance in enclosed spaces.
- Never expose the appliance to intense heat or humidity.
- Do not use steam- or high-pressure cleaners, hoses or sprays to clean the appliance.

⚠ WARNING – Risk of harm to health!

Children can lock themselves in the appliance, thereby putting their lives at risk.

- Do not install the appliance behind a door as this may obstruct the appliance door or prevent it from opening.
- With redundant appliances, unplug the power cord. Then cut through the cord and damage the lock on the appliance door beyond repair so that the appliance door will no longer close.

When spinning larger, waterproof items of laundry, imbalances may arise and lead to injuries.

- Do not wash and spin larger items of laundry, such as blankets or mattress covers, in the appliance.

⚠ WARNING – Risk of suffocation!

Children may breathe in or swallow small parts, causing them to suffocate.

- Keep small parts away from children.
- Do not let children play with small parts.

⚠ WARNING – Risk of poisoning!
Detergents and care products may result in poisoning if consumed.
- If accidentally swallowed, seek medical advice.
- Keep detergents and care products out of the reach of children.

⚠ WARNING – Risk of explosion!
Laundry that has been pretreated with flammable cleaning agents that contain solvents may cause an explosion in the appliance.
- Rinse pretreated laundry thoroughly with water before washing.

⚠ CAUTION – Risk of injury!
The covering plate may break if you stand on or climb onto the appliance.
- Do not stand on or climb onto the appliance.

The appliance may tip over if you sit on or lean against the open door.
- Do not sit on or lean against the appliance door.
- Do not place any objects on the appliance door.

Reaching into the drum while it is still turning may cause hand injuries.
- Wait for the drum to come to a complete stop before reaching inside.

⚠ CAUTION – Risk of scalding!
When you wash at high temperatures, the detergent solution gets hot.
- Do not touch the hot detergent solution.

⚠ CAUTION – Risk of chemical burns!
If the detergent drawer is opened, detergent and care products may spray out from the appliance. Contact with eyes or skin may cause irritation.
- Rinse eyes and/or skin thoroughly with clean water if they come into contact with detergents or care products.
- If accidentally swallowed, seek medical advice.
- Keep detergents and care products out of the reach of children.

1.6 Safe cleaning and maintenance

⚠ WARNING – Risk of electric shock!

Improper repairs are dangerous.

- Never make any technical modifications to the appliance or its features.
- Repairs to the appliance should only be carried out by trained specialist staff.
- Only use genuine spare parts when repairing the appliance.
- If the power cord of this appliance is damaged, it must be replaced by the manufacturer, the manufacturer's Customer Service or a similarly qualified person in order to prevent any risk.

An ingress of moisture can cause an electric shock.

- Before cleaning, pull out the mains plug or switch off the fuse in the fuse box.
- Do not use steam- or high-pressure cleaners, hoses or sprays to clean the appliance.

⚠ WARNING – Risk of injury!

The use of non-original spare parts and non-original accessories is dangerous.

- Only use the manufacturer's original spare parts and original accessories.

⚠ WARNING – Risk of poisoning!

Poisonous fumes may be given off if you use cleaning agents that contain solvents.

- Do not use cleaning agents that contain solvents.

2 Preventing material damage

ATTENTION!
The functionality of the appliance may be impaired if you use the wrong quantity of fabric softener, detergent, care product or cleaning agent.
- Follow the dosage recommendations from the manufacturer.

Exceeding the maximum load capacity impairs the function of the appliance.
- Observe the maximum load capacity for each programme and do not exceed it.
  → *"Programmes", Page 25*

The appliance is secured for transportation using transit bolts. Transit bolts which have not been removed may result in material damage and damage to the appliance.
- Before starting up the appliance, remove the transit bolts completely and keep them in a safe place.
- Before transport, fit the transit bolts fully in order to prevent damage in transit.

Material damage may be caused if the water inlet hose is connected incorrectly.
- Tighten the screw connections on the water inlet until they are hand-tight.
- Connect the water inlet hose directly to the water tap, without any additional connecting elements such as adapters, extensions or valves.
- Ensure that the inner diameter of the water tap is at least 17 mm.
- Make sure that the length of the thread on the connection to the water tap is at least 10 mm.

If the water pressure is too high or too low, the appliance may not be able to operate properly.
- Ensure that the water pressure in the water supply system is at least 100 kPa (1 bar) and max. 1000 kPa (10 bar).
- If the water pressure exceeds the maximum value specified, a pressure-reducing valve must be installed between the drinking water connection and the hose set of the appliance.
- Do not connect the appliance to the mixer tap of an unpressurised hot-water boiler.

Modified or damaged water hoses may result in material damage and damage to the appliance.
- Never kink, crush, modify or cut through water hoses.
- Only use the water hoses supplied with the appliance or genuine spare hoses.
- Never re-use water hoses that have been used before.

Operating the appliance using water that is dirty or too hot may lead to material damage and damage to the appliance.
- Only operate the appliance with cold mains water.

Unsuitable cleaning products may damage the surfaces of the appliance.
- Do not use harsh or abrasive detergents.
- Do not use cleaning products with a high alcohol content.
- Do not use hard scouring pads or cleaning sponges.
- Clean the appliance with nothing but water and a soft, damp cloth.
- Remove all detergent residue, spray residue or other residues immediately if they come into contact with the appliance.

3 Environmental protection and saving energy

3.1 Disposing of packaging

The packaging materials are environmentally compatible and can be recycled.

- Sort the individual components by type and dispose of them separately.

3.2 Save energy and conserve resources

If you follow these instructions, your appliance will use less electricity and less water.

Choose programmes with low temperatures and longer wash times and use maximum load capacity.

- ✔ Energy consumption and water consumption is most efficient.

Add detergent based on the laundry's degree of soiling.

- ✔ For light to normal soiling, a smaller amount of detergent is sufficient. Observe the dosage recommendation from the detergent manufacturer.

Reduce the washing temperature for lightly and normally soiled laundry.

- ✔ At lower temperatures, the appliance consumes less energy. For light to normal soiling, lower temperatures than indicated on the care label are also sufficient.

Set the maximum spin speed if you want to dry the laundry in the tumble dryer afterwards.

- ✔ The drier the laundry, the shorter the programme duration when drying which, in turn, reduces energy consumption. A higher spin speed reduces the residual moisture in the laundry and increases the volume of the spin noise.

Wash the laundry without prewash.

- ✔ Washing with prewash increases the programme duration and increases energy and water consumption.

The appliance has a continuous automatic load adjustment function.

- ✔ Depending on the type of fabric and load capacity, the continuous automatic load adjustment function optimally adjusts the water consumption and programme duration.

The appliance comes with an AquaSensor.

- ✔ During the rinse cycle, the AquaSensor checks the degree of turbidity of the rinsing water, and adjusts the duration and number of rinse cycles accordingly.

3.3 Energy saving mode

If you do not use the appliance for an extended period, it automatically switches to energy-saving mode. Energy-saving mode ends when you use the appliance again.

4 Installation and connection

4.1 Unpacking the appliance

ATTENTION!
Objects remaining in the drum that are not designed for operation with the appliance may cause material damage and damage to the appliance.
- Remove these objects, along with all supplied accessories, from the drum before starting the appliance.

1. Remove any packaging and protective covers completely from the appliance.
   → *"Disposing of packaging", Page 11*
2. Check the appliance for visible damage.
3. Open the door.
4. Remove any accessories from the drum.
5. Close the door.

4.2 Contents of package

After unpacking all parts, check for any damage in transit and completeness of the delivery.

ATTENTION!
If the appliance is operated with incomplete or defective accessories, the appliance may not be able to operate properly, or this may result in material damage or damage to the appliance.
- Do not operate the appliance with incomplete or defective accessories.
- Replace the accessories in question before operating the appliance.
  → *"Accessories", Page 29*

Note: The appliance has undergone a function test at the factory. This may cause water stains in the appliance, which the first wash cycle removes.

The delivery consists of the following:
- Washing machine
- Accompanying documents
- Transit bolts
  → *"Removing the transit bolts", Page 13*
- Cover caps
- Water inlet hose
  → *"Connecting the water inlet hose", Page 14*

4.3 Requirements for the installation location

⚠ **WARNING**
Risk of electric shock!
The appliance contains live parts. Touching live parts is dangerous.
- Do not operate the appliance without a cover cap.

⚠ **WARNING**
Risk of injury!
When using the appliance on a base, the appliance may tip over.
- Always secure the feet of the appliance to a base using the manufacturer's fixing brackets → *Page 29* before using the appliance for the first time.

ATTENTION!
If residual water in the appliance freezes, this may cause damage to the appliance.
- Do not install or operate this appliance anywhere that is liable to experience frost or outdoors.

If the appliance is tilted at an angle greater than 40°, residual water may leak out of the appliance and cause material damage.

- Tilt the appliance carefully.
- Transport the appliance in an upright position.

Installation location	Requirements
Base 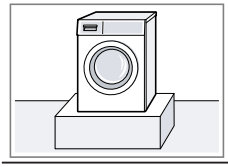	Secure the appliance with fixing brackets → *Page 29*.
Wooden joist floor 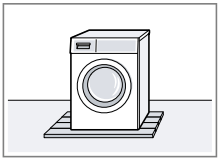	Place the appliance on a water-resistant wooden board (minimum thickness of 30 mm) which is screwed tightly to the floor.
Kitchen unit 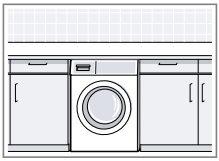	Only install the appliance underneath a continuous worktop that is securely connected to adjacent cabinets. Required niche width: 60 cm.
Against a wall 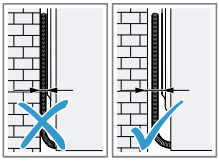	Do not trap the power cord or the hoses between the wall and the appliance.

4.4 Removing the transit bolts

The appliance is secured for transportation using transit bolts on the rear of the appliance.

Note: Keep the transit bolt screws and the sleeves in a safe place for future transport.
→ *"Inserting the transit bolts", Page 51*

1. Pull the hoses out of the holders.

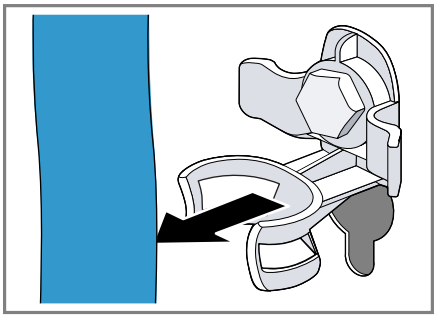

2. Unscrew ① and remove ② all of the screws for the 4 transit bolts using a WAF 13 wrench.

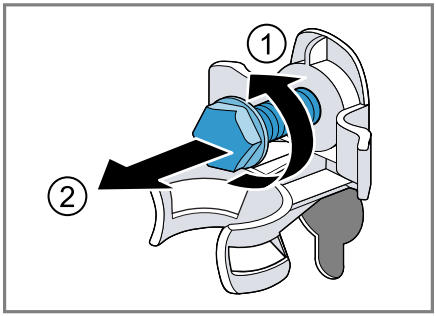

3. Remove the power cable from the holder.

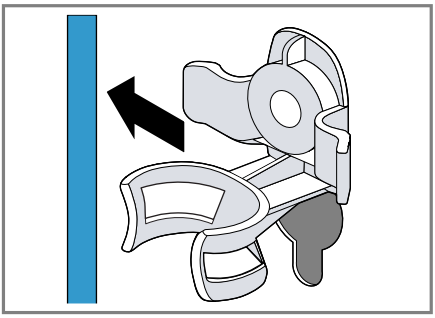

4. Remove the 4 sleeves.

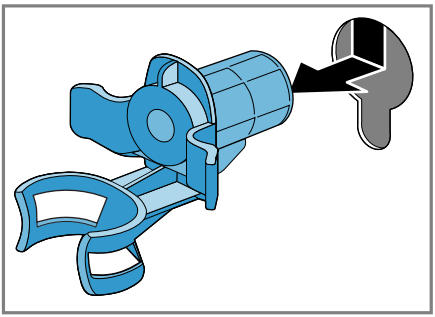

5. Put on the 4 cover caps.

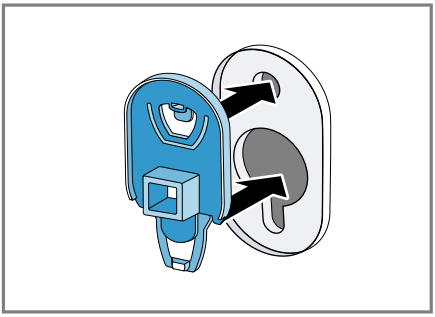

6. Push the 4 cover caps downwards.

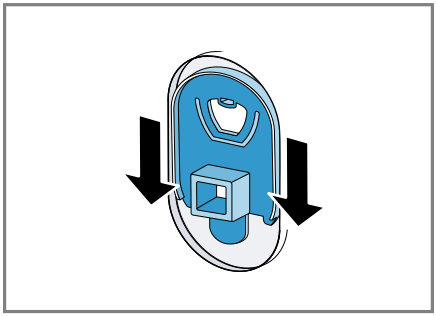

Note: To install the transit bolts to transport the appliance, perform these steps again in the reverse order.

4.5 Connecting the appliance

Connecting the water inlet hose

1. Connect the water inlet hose.

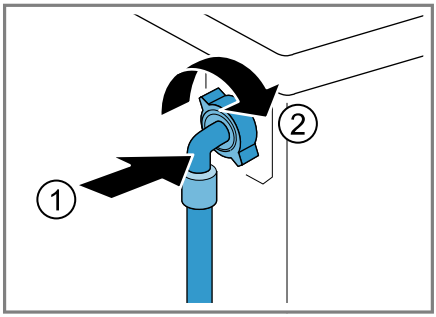

2. Connect the water inlet hose to a tap (26.4 mm = 3/4").

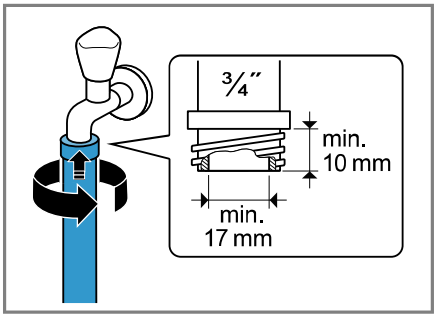

3. Open the water tap carefully and check that the connection points are tight.

Water outlet connection types

This information is intended to help you to connect this appliance to the water outlet.

ATTENTION!
When draining, the water outlet hose is subject to water pressure and may come loose from the installed connection point.
- Secure the water outlet hose against unintentional loosening.

Note: Observe the draining heights. The maximum draining height is 100 cm.

Siphon 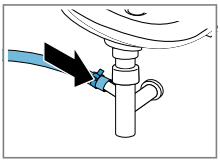	Secure the connection point with a (24–40 mm) hose clamp.
Sink 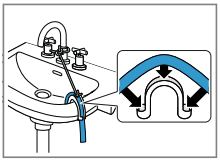	Fix and secure the water outlet hose with an elbow. → *"Accessories", Page 29*
Plastic pipe with rubber sleeve or gully 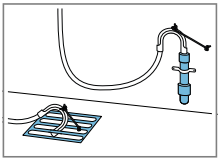	Fix and secure the water outlet hose with an elbow. → *"Accessories", Page 29*

Connecting the appliance to the electricity supply

Note: Your electrical domestic installation for this appliance must comply with the local legal provisions and safety regulations, and should include a residual current circuit-breaker.

1. Insert the mains plug of the appliance's power cable in a socket nearby.

   The connection details of the appliance can be found under Technical data → *Page 54*.
2. Check the mains plug is inserted properly.

4.6 Aligning the appliance

In order to reduce noise and vibration and to prevent the appliance from moving, align the appliance correctly.

1. Use a WAF 17 wrench to loosen the lock nuts in a clockwise direction.

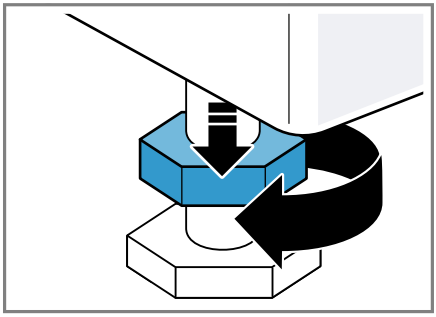

2. To align the appliance, turn the appliance feet. Check that the appliance is level using a spirit level.

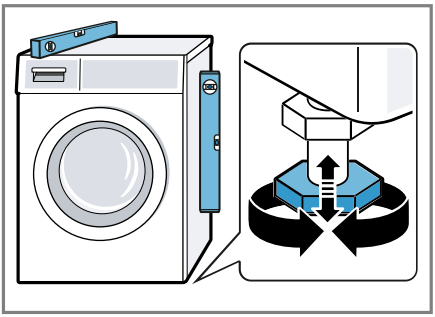

All appliance feet must stand firmly on the ground.

3. Use a WAF 17 wrench to tighten the lock nuts against the housing until they are hand-tight.

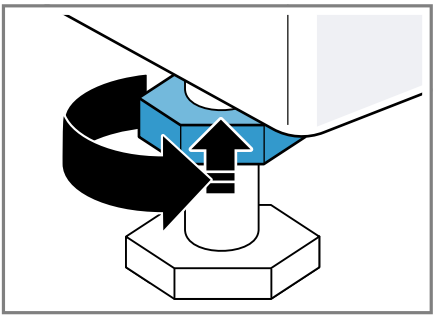

In doing so, hold the foot tight and do not adjust its height.

5 Before using for the first time

Prepare the appliance for use.

5.1 Starting an empty washing cycle

Your appliance was inspected thoroughly before leaving the factory. To remove any residual water, run the first wash cycle without any laundry.

1. Turn the programme selector to **Drum Clean**.
2. Close the door.
3. Pull out the detergent drawer.
4. Pour approx. 1 litre of water into the manual dosing compartment.

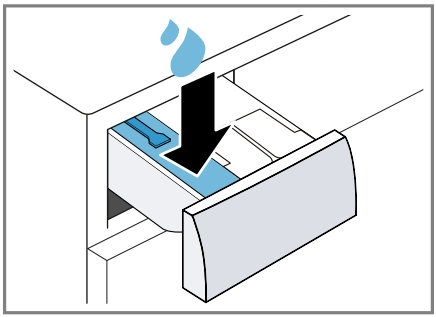

5. Add washing powder containing oxygen bleach to the manual dosing compartment.

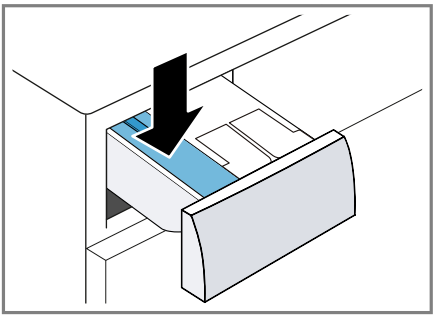

To prevent foaming, use only half of the amount of detergent recommended by the detergent manufacturer for light soiling. Do not use detergent suitable for woollens or delicates.

6. Push in the detergent drawer.
7. Press ▷II **Start/Reload** to start the programme.

✔ The display shows the remaining programme duration.
✔ After the programme has ended, the display shows: "End".

8. Start the first wash cycle or set the programme selector to **Off** to switch off the appliance.
→ *"Basic operation", Page 30*

6 Familiarising yourself with your appliance

6.1 Appliance

You can find an overview of the parts of your appliance here.

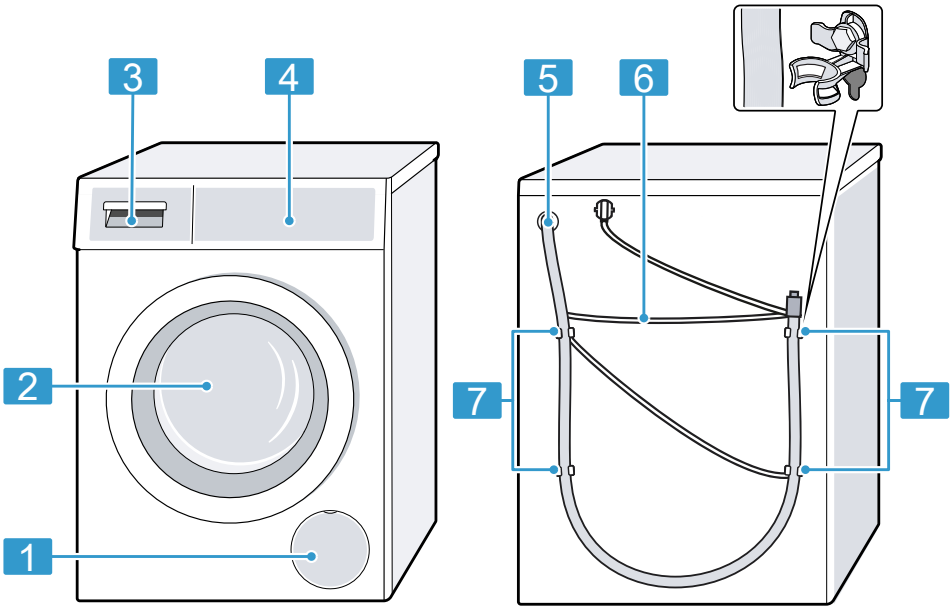

On certain models, specific details such as the colour and shape may differ from those pictured.

1	Maintenance flap for the drain pump → *Page 37*
2	Door
3	Detergent drawer → *Page 18*
4	Control panel → *Page 19*
5	Water outlet hose → *Page 15*
6	Power cord → *Page 15*
7	Transit bolts → *Page 13*

6.2 Detergent drawer

Note: Observe the manufacturer's instructions on the use and dosage of the detergent and care product and the information in the programme descriptions.

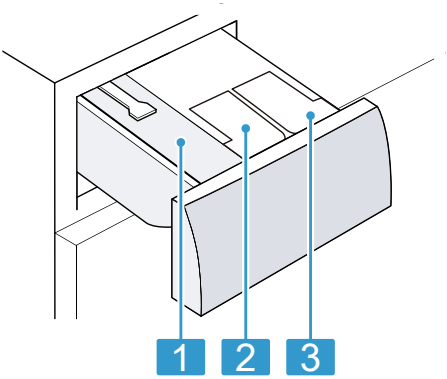

1	Manual dosing compartment → *"Using the manual dosing compartment", Page 33*
2	❀: Dispenser for fabric softener → *"Intelligent dosing system", Page 32*
3	♢: Dispenser for liquid detergent → *"Intelligent dosing system", Page 32*

6.3 Control panel

You can use the control panel to configure all functions of your appliance and to obtain information about the operating status.

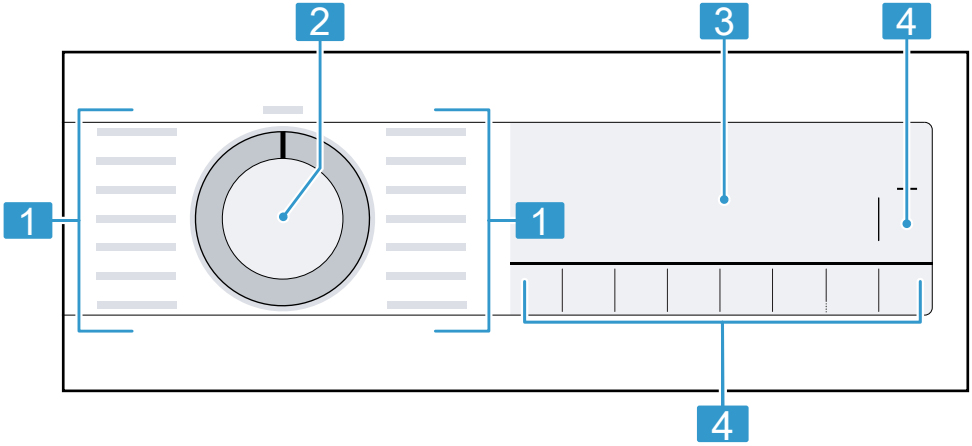

1	Programmes → *Page 25*
2	Programme selector → *Page 30*
3	Display → *Page 20*
4	Buttons → *Page 23*

7 Display

The display shows the current settings, options or relevant information.

Example: Display

Display	Description
0:40 [1]	Expected programme duration or programme time remaining in hours and minutes.
"10" / + [1]	Program end time → *"Buttons", Page 23*
9.0 [1]	Recommendation for the maximum load capacity for the selected program in kg.
- 1400	Set spin speed in rpm. : No final spin, only draining : Rinse Hold, no draining
- 90	Set temperature in °C. → *"Buttons", Page 23* (cold)
—	Start, cancel or pause ■ Lights up: The programme is running and can be cancelled or paused. ■ Flashes: The programme can be started or continued.
	Programme status: Prewashing
	Programme status: Washing
	Programme status: Rinsing
[1] Example	

Display	Description
	Programme status: Spinning
End	Programme status: Programme end
	Programme status: Steaming
	■ Lights up: The childproof lock is activated. ■ Flashes: The childproof lock is activated and the appliance has been operated. → *"Deactivating the childproof lock", Page 32*
	The crease-reduction function is activated. → *"Buttons", Page 24*
	Prewash is activated. → *"Buttons", Page 24*
	Rinse Hold is activated.
	Shortened programme length is activated. → *"Buttons", Page 23*
	The "Blood" stain type is activated.
	The "Grass" stain type is activated.
	The "Red wine" stain type is activated.
	The "Cooking fat/cooking oil" stain type is activated.
	Flashes: Drum cleaning is required. Run the Drum Clean programme for cleaning and caring for the drum and the outer tub. → *"Cleaning the drum", Page 35*
	■ Lights up: The intelligent dosing system for liquid detergent is activated. ■ Flashes: The fill level of the dispenser is below the minimum level. → *"Intelligent dosing system", Page 32* (liquid detergent)
	■ Lights up: The intelligent dosing system for fabric softener is activated. ■ Flashes: The fill level of the dispenser is below the minimum level. → *"Intelligent dosing system", Page 32* (fabric softener)
50 ml[1]	Basic dosage for detergent or fabric softener. → *Page 34*
	■ Lights up: The door is locked and cannot be opened. ■ Flashes: The door is not closed properly. ■ Off: The door is unlocked and can be opened.

[1] Example

Display	Description
	■ No water pressure. → *"E:30 / -10 and/or ", Page 42* ■ The water pressure from the tap is too low.
	The detergent drawer has not been pushed in fully. → *" ", Page 42*
E:35 / -10[1]	Error code, error display, signal. → *"Troubleshooting", Page 40*

[1] Example

8 Buttons

The selection of programme settings depends on the programme that is set.

Button	Selection	More information
Start/Reload	■ Start ■ Cancel ■ Pause	Start, cancel or pause the programme.
SpeedPerfect	■ Activate ■ Deactivate	Activate or deactivate a shorter programme duration. **Note:** Energy consumption increases. The washing result is not affected by this.
AntiStain	Multiple selection	Select the type of stain. The temperature, drum movement and soaking time are all adjusted to suit the type of stain.
i-DOS	■ Activate ■ Deactivate ■ Setting the basic dosage amount	Briefly press the button to activate or deactivate the intelligent dosing system for fabric softener or liquid detergent. Press and hold the button for approx. 3 seconds to set the basic dosage. → *Page 34*
Finish in	Up to 24 hours	Set the programme end time. The programme duration is already included in the set number of hours. Once the programme has started, the programme duration is displayed.
Temp. °C	- 90	Adjust the temperature. Set temperature in °C.
Spin Speed	- 1400	Adjust the spin speed or deactivate the spin cycle. Set spin speed in rpm. If is selected, the water is drained and the spin cycle is deactivated. The laundry stays wet inside the drum.
3 sec. (Child Lock 3 sec.)	■ Activate ■ Deactivate	→ *"Childproof lock", Page 32*

Button	Selection	More information
Prewash	■ Activate ■ Deactivate	Activate or deactivate prewash, e.g. for washing heavily soiled laundry. **Note:** If the intelligent dosing system is activated, the detergent will be dispensed automatically for the prewash and the main wash. If the intelligent dosing system is deactivated, place the detergent directly in the drum for the prewash and into the manual dosing compartment for the main wash. → *"Detergent drawer", Page 18*
Reduced Ironing	■ Activate ■ Deactivate	Activate or deactivate the reduced creasing programme. In order to reduce creasing in the laundry, the spin cycle and the spin speed are adapted. **Note:** The laundry has a higher residual moisture after washing. To reduce creasing, hang up the laundry immediately after washing.

9 Programmes

Note: The laundry's care labels provide you with additional information on programme selection.

Programme	Description	Max. load (kg)
Cottons	Wash hard-wearing items made of cotton, linen or blended fabrics. Also suitable as a short programme for normally soiled laundry when you activate SpeedPerfect. Programme setting: ■ Max. 90 °C ■ Max. 1400 rpm	9.0 5.0 [1]
Eco 40-60	Wash items made from cotton, linen or blended fabrics. **Note:** Fabrics which can be washed from 40 °C up to 60 °C as per the care symbol can be washed together. The washing performance corresponds to the best possible washing performance class according to the legal requirements. For this programme, the washing temperature is automatically adjusted depending on the load size, in order to achieve the best possible energy efficiency with the best possible washing result. You cannot change the washing temperature. Programme setting: **Note:** The temperature cannot be adjusted in this programme and is set automatically. ■ Max. - °C ■ Max. 1400 rpm	9.0
Easy Care	Wash items made from synthetic or blended fabrics. Programme setting: ■ Max. 60 °C ■ Max. 1200 rpm	4.0
Mixed Load	Wash items made from cotton, linen, or synthetic or blended fabrics. Suitable for lightly soiled laundry.	4.0

[1] **SpeedPerfect** activated
[2] Washing not possible

Programme	Description	Max. load (kg)
	Programme setting: ■ Max. 60 °C ■ Max. 1400 rpm	
Delicates/Silk	Wash delicate, washable items made from silk, viscose and synthetic fabrics. Use a detergent that is suitable for delicates or silk. **Note:** Wash especially delicate items or items with hooks, eyelets or clips in a mesh laundry bag. Programme setting: ■ Max. 40 °C ■ Max. 800 rpm	2.0
Wool	Hand- or machine-washable items that are made from wool or contain wool. To prevent the laundry from shrinking, the drum moves the items very gently with long pauses. Use a detergent that is suitable for wool. Programme setting: ■ Max. 40 °C ■ Max. 800 rpm	2.0
Rinse	Rinse and then spin the laundry, and drain the water. Programme setting: Max. 1400 rpm	–
Spin/Drain	Spin the laundry and drain the water. If you only want to drain the water, activate ∅. The laundry is not spun. Programme setting: Max. 1400 rpm	–
Hygiene Plus	Wash hard-wearing items made of cotton, linen or blended fabrics. Suitable for allergy sufferers and for strict hygiene requirements. **Note:** Once the set temperature has been reached, it remains constant throughout the entire washing process. Programme setting: ■ Max. 60 °C ■ Max. 1400 rpm	6.5
Sportswear	Wash sports and leisure items made from synthetic fibres, microfibre or fleece. Use a detergent that is suitable for sports items.	2.0

[1] **SpeedPerfect** activated
[2] Washing not possible

Programme	Description	Max. load (kg)
	Do not use fabric softener. **Tip:** Use the Easy Care programme to wash heavily soiled laundry. Programme setting: ■ Max. 40 °C ■ Max. 800 rpm	
Iron Assist	Suitable for shirts, T-shirts and similar fabrics made from cotton, linen or blended fabrics. Programme for warming and steaming dry items using steam in order to hang them up once the programme has ended or to make them easier to iron. The programme's maximum load is five shirts or five t-shirts. Activate SpeedPerfect if you only want to steam one item of laundry. **Notes** ■ Immediately after the programme ends, hang up the warm, steamed items or iron them. ■ The laundry is not washed or cleaned. Do not use any detergent or cleaning products. ■ The steam is hot and may cause damage to certain fabrics or fabric types. The programme is therefore not suitable for outdoor clothing or items made from silk or wool, such as jumpers.	- [2]
Auto Soft	Wash delicate items made from cotton, or synthetic or blended fabrics. Gentle laundry care. The degree of soiling and the type of fabric are automatically detected. The washing process is adapted. **Note:** The temperature and spin speed cannot be adjusted in this programme and are set automatically. The maximum temperature is 30 °C. The maximum spin speed is 800 rpm.	3.5
Drum Clean	Clean and care for the drum. Use this programme in the following cases: ■ Before using the appliance for the first time	– [2]

[1] **SpeedPerfect** activated
[2] Washing not possible

Programme	Description	Max. load (kg)
	■ If you regularly wash at temperatures of 40 °C or lower ■ After a prolonged period of non-use Use washing powder containing oxygen bleach. Add washing powder containing oxygen bleach to the manual dosing compartment. → *"Detergent drawer", Page 18* Halve the amount of detergent to avoid foaming. Do not use fabric softener. Do not use liquid detergent or detergent that is intended for woollens or delicates. **Note:** The drum cleaning indicator flashes to remind you if you have not used a programme at 60 °C or higher for a long time.	
Super Quick 15'/30'	Wash items made from cotton, or synthetic or blended fabrics. Short programme for small items of lightly soiled laundry. The programme duration is approx. 30 minutes. If you wish to reduce the programme duration to 15 minutes, activate SpeedPerfect. The maximum load is reduced to 2.0 kg. Programme setting: ■ Max. 40 °C ■ Max. 1200 rpm	4.0 2.0[1]

[1] **SpeedPerfect** activated
[2] Washing not possible

10 Accessories

Use original accessories. These have been made especially for your appliance.

Note: Some accessories are available in other colours. Contact
→ *"Customer Service", Page 52*.

	Use	Order number
Water inlet hose extension	Extend the water inlet hose for cold water or AquaStop (approx. 2.50 m).	WMZ2381
Fixing brackets	Improves the stability of the appliance.	WMZ2200
Longer water inlet hose	Replace the standard water inlet hose with a longer hose (2.20 m).	00353925
Elbow	Secure the water outlet hose in place.	00655300
Platform	Install the appliance at a raised height so that it can be easily loaded and unloaded.	WMZP-W20W
Washing machine cleaners	Cleaning products for maintaining the appliance interior.	00311929

11 Laundry

11.1 Preparing the laundry

ATTENTION!
Objects remaining in the laundry may damage the laundry and the drum.
- ▸ Remove all items from any pockets in your laundry before using the appliance.

Note
The appliance and fabrics are protected when you prepare your laundry.
- Brush off sand and soil
- Sort the laundry according to colour and textiles and observe the care labels
- Close all zips, hook and loop fasteners, hooks and eyes
- Tie cloth belts, cloth straps and cords together
- Remove curtain fittings and lead strips
- Wash small or particularly delicate items in a mesh washing bag
- Wash large and small items of laundry together
- Wash laundry with fresh stains immediately
- Pretreat laundry with dried stains and wash several times
- Load the laundry unfolded into the drum
- Before loading the drum, any laundry that has been pre-treated with chlorine bleach should be rinsed several times

12 Detergents and care products

The manufacturer's instructions for use and dosage can be found on the packaging.

Notes

- When using liquid detergents, only use liquid detergents that are self-flowing
- Do not mix different liquid detergents
- Do not mix detergent and fabric softener
- Do not use products that have expired or are highly congealed
- Do not use products containing solvents, caustic agents or volatile substances
- Do not use chlorine bleach
- Do not use dyes regularly as fixing salt can damage stainless steel
- Do not use color-bleaching agents in the appliance
- Do not pour vinegar into the dispensers → *Page 33* of the intelligent dosing system

13 Basic operation

13.1 Switching on the appliance

Requirement: The appliance has been correctly installed and connected.
→ *"Installation and connection", Page 12*

- ▸ Turn the programme selector to a programme.
- ✔ An audible function test is carried out.

13.2 Setting a programme

1. Turn the programme selector and set the required programme.
   → *"Programmes", Page 25*
2. If required, adjust the programme settings. → *Page 30*

13.3 Adjusting the programme settings

Requirement: A programme has been set.
→ *"Setting a programme", Page 30*

- ▸ Adjust the programme settings.
  → *"Buttons", Page 23*

Notes

- The programme settings are not saved permanently for the programme.
- The setting is saved if you activate or deactivate the intelligent dosing system.

13.4 Loading laundry

Note: To prevent creasing, note the maximum load for the programmes.
→ *"Programmes", Page 25*

Requirements

- The laundry is prepared and sorted.
  → *"Laundry", Page 29*
- The drum is empty.

1. Open the door.
2. Place the laundry in the drum.
3. Close the door.

   Ensure that there is no laundry trapped in the door.

13.5 Starting the programme

Note: If the intelligent dosing system is activated, make sure that the dispensers have been filled → *Page 33* and the basic dosage has been set → *Page 34*.

Requirement: A programme is set. → *"Setting a programme", Page 30*

- Press ▷II **Start/Reload**.
- ✔ The drum rotates and load detection takes place. This can take up to 2 minutes, after which water enters the drum.
- ✔ The display shows the programme duration or the programme end time.
- ✔ After the programme has ended, the display shows: "End".

13.6 Soaking laundry

Note: No additional detergent is required for soaking. The appliance uses the filled detergent for soaking and washing.

Requirements

- The laundry is placed in the appliance. → *"Loading laundry", Page 30*
- A programme has started. → *"Starting the programme", Page 31*

1. Press ▷II **Start/Reload** approx. 10 minutes after the programme start.

   The programme pauses and the laundry can soak.
2. Press ▷II **Start/Reload** after the required soaking time.

13.7 Adding laundry

After the programme starts, you can remove or add laundry depending on the programme status.

1. Press ▷II **Start/Reload**.

   The appliance pauses.

   Note: If you want to add laundry, follow the instructions on the display. → *"Display", Page 21*
2. Open the door.
3. Add or remove laundry.
4. Close the door.
5. Press ▷II **Start/Reload**.

13.8 Cancelling the programme

1. Press ▷II **Start/Reload**.
2. Open the door.

   The appliance door remains locked for safety reasons if the temperature and water levels are high.
   - If the temperature is high, start the **Rinse** programme.
   - If the water level is high, start the **Spin** programme or select a suitable programme for draining. → *"Programmes", Page 25*
3. Remove the laundry. → *Page 32*

13.9 Resuming the programme when the programme status is Rinse Hold

Requirements

- Rinse Stop is activated.
- The last rinse cycle of the set programme has ended and the laundry is in the rinsing water.

1. Set the **Spin** programme or a programme for draining the water.
   → *"Programmes", Page 25*
2. Press ▷II **Start/Reload**.

13.10 Unloading the laundry

1. Open the door.
2. Remove the laundry from the drum.

13.11 Switching off the appliance

1. Turn the programme selector to **Off**.
2. Turn off the tap.
3. Wipe the rubber gasket dry and remove any foreign objects.

4. Leave the appliance door and detergent drawer open so that residual water can evaporate.

14 Childproof lock

Secure your appliance against being operated unintentionally using the controls.

14.1 Activating the childproof lock

- Press on both ⊶ **3 sec.** buttons for approx. three seconds.
- ✔ The display shows ⊶.
- ✔ The control elements are locked.
- ✔ The childproof lock remains active even after the appliance has been switched off and in the event of a power cut.

14.2 Deactivating the childproof lock

Requirement: To deactivate the childproof lock, the appliance must be switched on.

- Press on both ⊶ **3 sec.** buttons for approx. three seconds.

  So that the programme currently running is not cancelled, the programme selector must be set to the initial programme.
- ✔ ⊶ goes out in the display.

15 Intelligent dosing system

The appliance's intelligent dosing system is activated at the factory and automatically doses liquid detergent and fabric softener for any programmes in which intelligent dosing is possible.

Note: You can use the buttons → *Page 23* to deactivate the intelligent dosing system, e.g. in order to manually dose washing powder → *Page 33*.

15.1 Pouring liquid detergent and fabric softener into the dispensers

If you are using the intelligent dosing system or if the appliance displays a notification during operation of the appliance, fill the dispensers.

Notes

- Only pour suitable liquid detergent and fabric softener into the dispensers. → *Page 30*
- If you add more liquid detergent or fabric softener to the dispenser, use the same product.
- If you want to replace the liquid detergent or fabric softener in the dispenser with another product, clean the detergent drawer beforehand → *Page 35*.
- If you are using the intelligent dosing system, do not add additional detergent or fabric softener into the compartment for manual dosing. This is to prevent overdosing or foam formation.

1. Pull out the detergent drawer.
2. Open the lid.

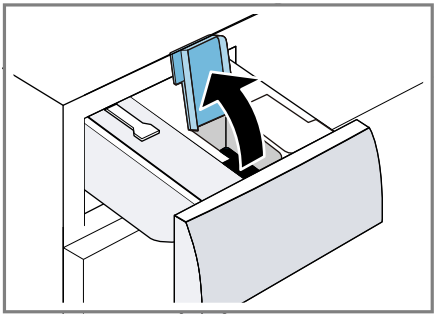

3. Pour liquid detergent ⌂ and fabric softener ❀ into the relevant dispensers → *Page 18*.

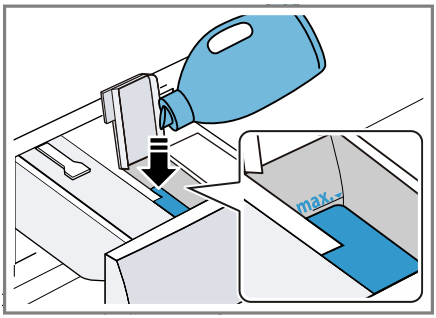

Do not exceed the marking for the maximum fill level when filling.

4. Close the lid.

   Note: To prevent the liquid detergent or fabric softener from drying out, close the lids immediately after filling.

5. Push in the detergent drawer.

15.2 Using the manual dosing compartment

If you are not using the intelligent dosing system, if intelligent dosing is not possible for a programme, or if you want to add additional care product, e.g. stain remover or starch, use the manual dosing compartment.

Note: Observe the information about detergents and care products → *Page 30*.

1. Pull out the detergent drawer.
2. Pour laundry detergent or care product into the manual dosing compartment → *Page 18*.
3. Push in the detergent drawer.

15.3 Setting the basic dosage amount

To allow for intelligent dosing, set the basic dosage amount for the dispenser. The basic dosage amount corresponds to the dosage recommendation from the detergent manufacturer on the packaging. Set the basic dosage amount that corresponds to the dosage recommendation for 4.5 kg of normally soiled laundry. In doing so, note the water hardness.

1. Press and hold **i-DOS** for approx. 3 seconds.
✔ The display shows the basic dosage set for .
2. To set the basic dosage for , press **i-DOS**.
3. To adjust the setting, press **Finish in**.
4. Wait briefly to save the setting.

16 Basic settings

You can configure the basic settings for your appliance to meet your needs.

16.1 Overview of the basic settings

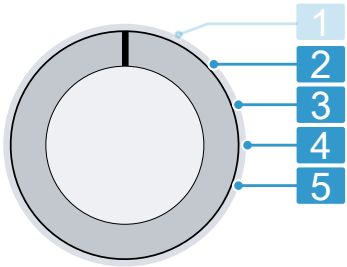

Programme selector with programme positions

2	Set the volume of the signal at the end of the programme: 0 (off) to 4 (very loud)
3	Set the volume of the signal tone emitted when the buttons are pressed: 0 (off) to 4 (very loud)
4	Activate (On) or deactivate (OFF) the reminder to clean the drum.
5	Display the number of finished programmes.

16.2 Changing the basic settings

1. Set the programme selector to position 1. → *Page 34*

2. Press **Spin Speed** and, at the same time, turn the programme selector to position 2.
✔ The display shows the current value.
3. Use the programme selector to select the required basic setting.
→ *Page 34*
4. To change the value, press **Finish in**.
5. To save the changes, switch off the appliance.

17 Cleaning and servicing

To keep your appliance working efficiently for a long time, it is important to clean and maintain it carefully.

17.1 Cleaning the drum

⚠ **CAUTION**
Risk of injury!
Permanently washing at low temperatures and a lack of ventilation for the appliance may damage the drum and cause injury.
- Regularly run a programme for cleaning the drum or wash at temperatures of at least 60 °C.
- Leave the appliance to dry after every operation with the door open, and leave the detergent drawer to dry.

- Run the **Drum Clean** programme without laundry but with washing powder that contains oxygen bleach or a a cleaning agent for caring for the inside of the appliance.
→ *"Accessories", Page 29*

17.2 Cleaning the detergent drawer

If you want to replace the liquid detergent or fabric softener in the dispenser with another product or if the detergent drawer is dirty, clean the detergent dispenser.

ATTENTION!
The pump unit contains electrical components. Electrical components may be damaged if they come into contact with liquids.
- Do not clean the pump unit in the dishwasher and do not immerse it in water.
- Protect the electrical connection on the rear against water, detergent and fabric softener residue.

1. Switch off the appliance.
→ *"Switching off the appliance", Page 32*
2. Pull out the detergent drawer.
3. Press down on the insert and remove the detergent drawer.

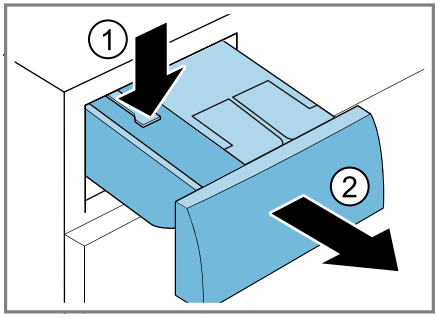

4. Remove the pump unit.

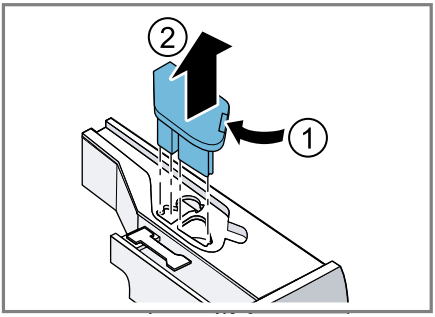

5. Unclip the detergent drawer cover and remove it.

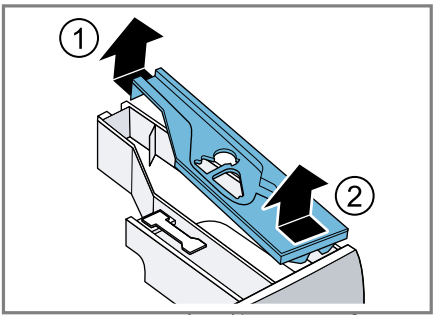

6. Empty the detergent drawer.

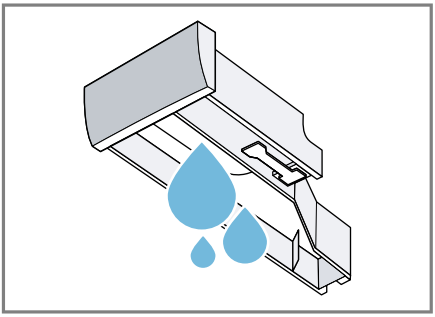

7. Clean the pump unit with a damp cloth.

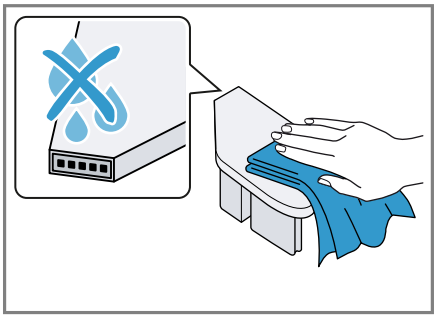

8. Clean the detergent drawer and the cover with a soft, damp cloth or hand shower.

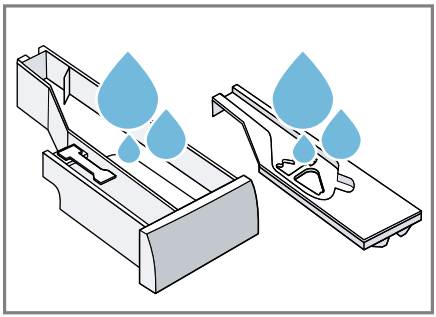

9. Dry the detergent drawer, cover and pump unit and reinsert them.

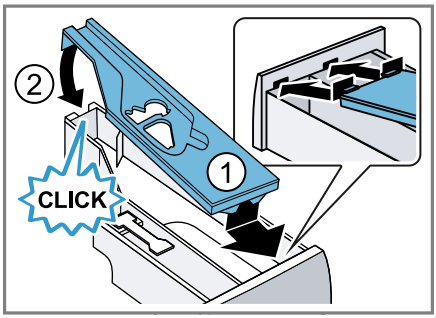

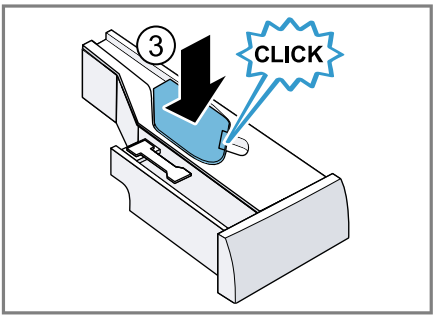

10. Clean the housing of the detergent drawer in the appliance.

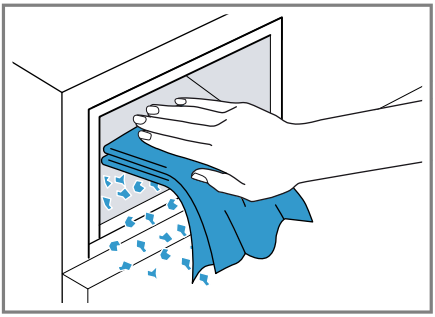

11. Push in the detergent drawer.

17.3 Cleaning the drain pump

Clean the drain pump regularly, at least once a year, as well as in the event of faults, e.g. blockages or rattling noises.

Emptying the drain pump

1. Turn off the tap.
2. Switch off the appliance.
   → *"Switching off the appliance", Page 32*
3. Disconnect the appliance's mains plug from the power supply.
4. Open and remove the maintenance flap.

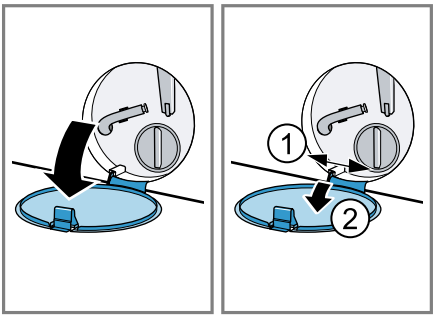

5. Slide a sufficiently large container under the opening.

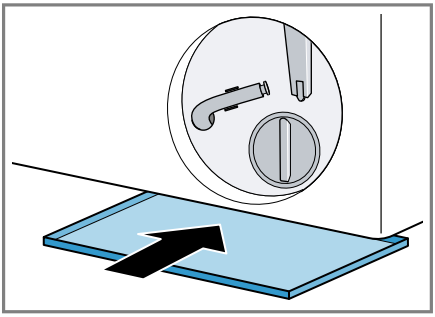

6. Take the drain hose out of the holder.

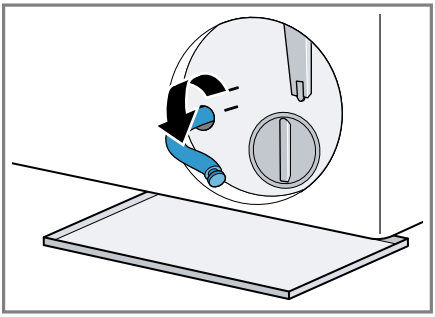

7. ⚠ **CAUTION - Risk of scalding!**
When you wash at high temperatures, the detergent solution gets hot.
- Do not touch the hot detergent solution.

To allow the detergent solution to flow out into the container, remove the sealing cap.

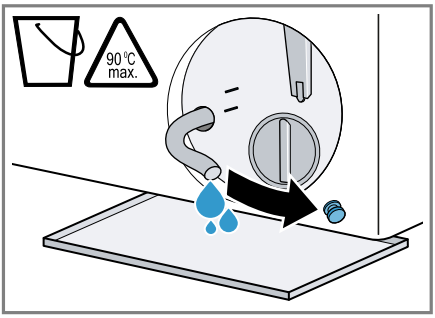

8. Firmly press on the sealing cap.

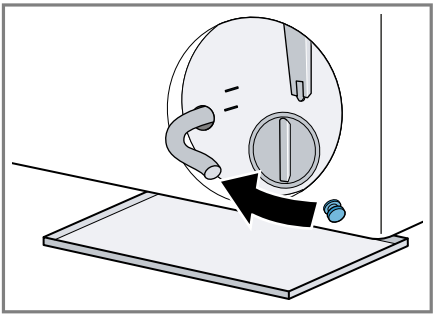

9. Insert the drain hose into the holder.

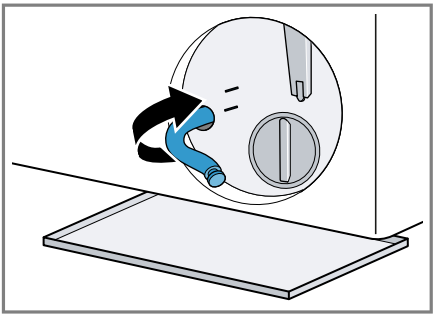

Cleaning the drain pump

Requirement: The drain pump is empty. → *Page 37*

1. Since water may remain in the drain pump, unscrew the pump cap carefully.
   – The filter insert in the pump housing may become stuck due to coarse particles of dirt. Loosen the dirt and remove the filter insert.

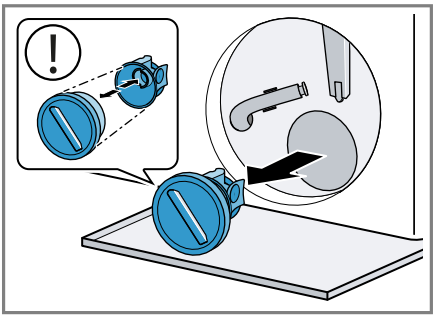

The pump cap is comprised of two parts which can be taken apart for cleaning.

2. Clean the interior, the thread on the pump cap and the pump housing.

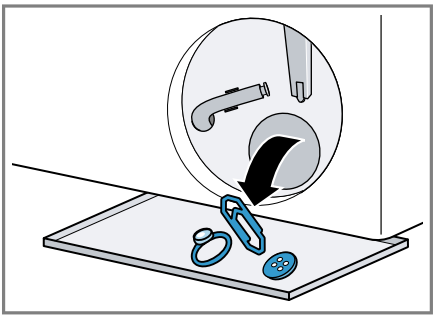

3. Ensure that the impeller in the drain pump can rotate.

4. Insert the pump cap.
   – Ensure that the parts of the pump cap are correctly assembled.

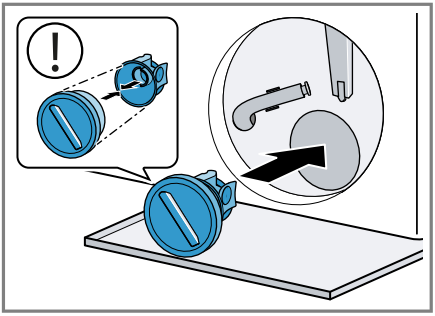

5. Screw the pump cap as far as it will go.

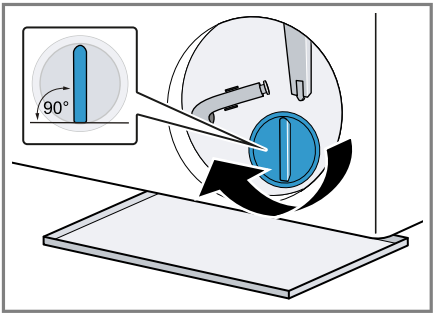

The handle on the pump cap must be in a vertical position.

6. Insert and close the maintenance flap.

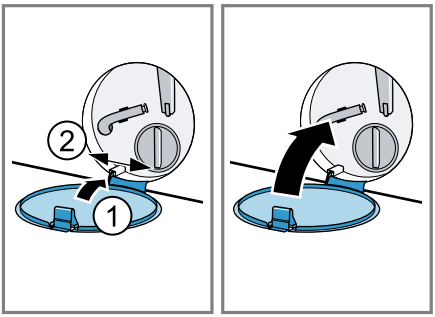

Before the next wash

To prevent unused detergent from flowing straight into the outlet in the next wash, run a suitable programme for draining after you have emptied the drain pump.

1. Open the water tap.
2. Insert the mains plug.
3. Switch on the appliance.
4. Pour 1 litre of water into the manual dosing compartment.
5. Select a suitable programme for draining.
   → *"Programmes", Page 25*

18 Troubleshooting

You can rectify minor faults on your appliance yourself. Read the troubleshooting information before contacting after-sales service. This will avoid unnecessary costs.

⚠ **WARNING**
Risk of electric shock!
Improper repairs are dangerous.
- Never make any technical modifications to the appliance or its features.
- Repairs to the appliance should only be carried out by trained specialist staff.
- Only use genuine spare parts when repairing the appliance.
- If the power cord of this appliance is damaged, it must be replaced by the manufacturer, the manufacturer's Customer Service or a similarly qualified person in order to prevent any risk.

Fault	Cause and troubleshooting
The display goes out and ▷II **Start/Reload** flashes.	Energy-saving mode is active ▸ Press any button. ✔ The display lights up again.
"E:36 / -10"	Drain pipe or water outlet hose is blocked. ▸ Clean the drain pipe and the water outlet hose.
	Drain pipe or water drain hose is caught or jammed. ▸ Ensure that the drain pipe and water drain hose are not kinked or trapped.
	The water outlet hose is connected too high. ▸ Install the water outlet hose at a maximum height of 1 metre.
	Unapproved extension installed on the water drain hose. ▸ Remove any unapproved extensions from the water hose. → *"Connecting the appliance", Page 14*
	Drain pump is blocked. ▸ → *"Cleaning the drain pump", Page 37*
	Pump cover is not correctly assembled. ▸ Correctly assemble the pump cover.
	The pump cap is not fully screwed in. ▸ Ensure that the pump cap is screwed in all the way into the appliance. The handle on the pump cap must be in a vertical position.
	Detergent dosage is too high.

Fault	Cause and troubleshooting
"E:36 / -10"	▸ Immediate measure: Mix one tablespoon of fabric softener with 0.5 litres of water and pour the mixture into the compartment for manual dosing (not for outdoor clothing, sportswear or items stuffed with down). ▸ If intelligent dosing is activated, reduce the basic dosage. → *Page 34* ▸ If you dose manually, reduce the amount of detergent for the next washing cycle with the same load.
"E:10 / -00 / -10 / -20"	The pump for the intelligent dosing system is blocked. **1.** Switch off the appliance. **2.** Clean the pump unit. → *"Cleaning the detergent drawer", Page 35* **3.** Switch the appliance on. **4.** If the display appears again after cleaning the pump unit, or the programme cannot be started, call customer service. → *"Customer Service", Page 52* **Note:** You can deactivate and manually dose the intelligent dosing system until the fault is rectified. → *"Buttons", Page 23*
"H:32"	The unbalanced load detection system has interrupted the spin cycle because the laundry is unevenly distributed. ▸ Redistribute the laundry in the drum. **Note:** Where possible, mix large and small items in the drum. Different sized items of laundry distribute themselves better during the spin cycle.
"E:30 / -10" and/or 🚰	The water pressure is low. No remedial action possible.
	The filters in the water inflow are blocked. ▸ Clean the filters in the water inflow.
	The tap is turned off. ▸ Turn on the tap.
	The water inlet hose is kinked or jammed. ▸ Ensure that the water inlet hose is not kinked or jammed.
	Water level measurement system is defective. **Note:** With the error message, the appliance starts a draining process.

Fault	Cause and troubleshooting
"E:30 / -10" and/or	1. First wait approx. 5 minutes until the drain process ends. 2. To reset the error message, switch the appliance off. 3. Switch the appliance back on. 4. If the error message is displayed again, call customer service. → *"Customer Service", Page 52*
	The detergent drawer has not been pushed in fully. ▸ Push in the detergent drawer until the symbol goes out.
	The pump unit is not inserted. 1. Insert the pump unit into the detergent drawer. → *"Cleaning the detergent drawer", Page 35* 2. Push in the detergent drawer until the symbol goes out.
lights up.	The temperature is too high. ▸ Wait until the temperature has dropped. ▸ Cancel the programme. → *"Cancelling the programme", Page 31*
	Water level is too high. ▸ Select a suitable programme for draining. → *"Programmes", Page 25*
flashes.	Door is not closed. ▸ Close the door.
	Laundry is caught in the door. ▸ Remove any trapped laundry.
	Drum cleaning is required. ▸ → *"Cleaning the drum", Page 35*
"E:30/-20"	Detergent dosage is too high. ▸ If you dose manually, reduce the amount of detergent for the next washing cycle with the same load.
	Additional water is added. ▸ Do not add any extra water to the appliance while it is operating.
	Solenoid valve defective. ▸ Call the after-sales service. → *"Customer Service", Page 52*

Fault	Cause and troubleshooting
All other error codes.	Malfunction **1.** Switch the appliance off and then on again. **2.** If the message appears again, disconnect the appliance from the power supply for at least 30 seconds by pulling out the plug or by switching off the relevant circuit breaker in the fuse box. ✔ If the fault was a one-off, the message disappears. **3.** If the message appears again, call the after-sales service. Please specify the exact error message when calling. → *"Customer Service", Page 52*
The appliance is not working.	The mains plug of the power cord is not plugged in. ▸ Connect the appliance to the power supply.
	The circuit breaker in the fuse box has tripped. ▸ Check the circuit breaker in the fuse box.
	There has been a power cut. ▸ Check whether the lighting in your room or other appliances are working.
The programme does not start.	▷II **Start/Reload** has not been pressed. ▸ Press ▷II **Start/Reload**.
	Door is not closed. ▸ Close the door.
	Childproof lock is activated. ▸ Deactivate childproof lock. → *"Deactivating the childproof lock", Page 32*
	⏲ **Finish in** is activated. ▸ Check whether ⏲ **Finish in** is activated. → *"Buttons", Page 23*
	Laundry is caught in the door. ▸ Remove any trapped laundry.
	The detergent drawer has not been pushed in fully. ▸ Push in the detergent drawer until the symbol goes out.
	The pump for the intelligent dosing system is blocked. **1.** Switch off the appliance. **2.** Clean the pump unit. → *"Cleaning the detergent drawer", Page 35* **3.** Switch the appliance on.

Fault	Cause and troubleshooting
The programme does not start.	4. If the display appears again after cleaning the pump unit, or the programme cannot be started, call customer service. → *"Customer Service", Page 52* **Note:** You can deactivate and manually dose the intelligent dosing system until the fault is rectified. → *"Buttons", Page 23*
The door cannot be opened.	The temperature is too high. ▸ Wait until the temperature has dropped. ▸ Cancel the programme. → *"Cancelling the programme", Page 31*
	Water level is too high. ▸ Select a suitable programme for draining. → *"Programmes", Page 25*
	Power failure. ▸ Open the door using the emergency release. → *"Emergency release", Page 51*
The water is not draining.	Drain pipe or water outlet hose is blocked. ▸ Clean the drain pipe and the water outlet hose.
	Drain pipe or water drain hose is caught or jammed. ▸ Ensure that the drain pipe and water drain hose are not kinked or trapped.
	Drain pump is blocked. ▸ → *"Cleaning the drain pump", Page 37*.
	The water outlet hose is connected too high. ▸ Install the water outlet hose at a maximum height of 1 metre.
	Pump cover is not correctly assembled. ▸ Correctly assemble the pump cover.
	Detergent dosage is too high. ▸ Immediate measure: Mix one tablespoon of fabric softener with 0.5 litres of water and pour the mixture into the compartment for manual dosing (not for outdoor clothing, sportswear or items stuffed with down). ▸ If intelligent dosing is activated, reduce the basic dosage. → *Page 34* ▸ If you dose manually, reduce the amount of detergent for the next washing cycle with the same load.

Fault	Cause and troubleshooting
The water is not draining.	Unapproved extension installed on the water drain hose. ▸ Remove any unapproved extensions from the water hose. → *"Connecting the appliance", Page 14*
	The pump cap is not fully screwed in. ▸ Ensure that the pump cap is screwed in all the way into the appliance. The handle on the pump cap must be in a vertical position.
Water is not flowing in. Detergent is not being dispensed.	▷II **Start/Reload** has not been pressed. ▸ Press ▷II **Start/Reload**.
	The filters in the water inflow are blocked. ▸ Clean the filters in the water inflow.
	The tap is turned off. ▸ Turn on the tap.
	The water inlet hose is kinked or jammed. ▸ Ensure that the water inlet hose is not kinked or jammed.
The spin cycle runs several times.	The unbalanced load detection system eliminates an imbalance by repeatedly redistributing the laundry. ▸ Not a fault – no action required. **Note:** When loading, where possible, place large and small items of laundry together in the drum. Different sized items of laundry distribute themselves better during the spin cycle.
The programme duration changes during the wash cycle.	The programme operation is optimised electronically. This may change the programme duration. ▸ Not a fault – no action required.
	The unbalanced load detection system eliminates an imbalance by repeatedly redistributing the laundry. ▸ Not a fault – no action required. **Note:** When loading, where possible, place large and small items of laundry together in the drum. Different sized items of laundry distribute themselves better during the spin cycle.
	Foam detection system switches on a rinse cycle if foam build-up is too high. ▸ Not a fault – no action required.

Fault	Cause and troubleshooting
No water is visible in the drum.	Water is below the visible area. ▸ Not a fault – no action required. ▸ Do not add any extra water to the appliance while it is operating.
Drum jerks after the programme starts.	This is caused by an internal motor test. ▸ Not a fault – no action required.
Vibrations and movement of the appliance whilst spinning.	Appliance is not correctly aligned. ▸ → *"Aligning the appliance", Page 15*
	The appliance feet are not fixed. ▸ Secure the appliance feet. → *"Aligning the appliance", Page 15*
	Transit bolts have not been removed. ▸ → *"Removing the transit bolts", Page 13*.
Drum rotates, water does not flow in.	Load detection is active. ▸ Not a fault – no action required. **Note:** The load detection can take up to two minutes.
Heavy foam build-up	Detergent dosage is too high. ▸ Immediate measure: Mix one tablespoon of fabric softener with 0.5 litres of water and pour the mixture into the compartment for manual dosing (not for outdoor clothing, sportswear or items stuffed with down). ▸ If intelligent dosing is activated, reduce the basic dosage. → *Page 34* ▸ If you dose manually, reduce the amount of detergent for the next washing cycle with the same load.
i-DOS cannot be actuated.	Intelligent dosing is not intended for this programme. ▸ Use the manual dosing compartment. → *Page 33*
	Programme progress does not allow intelligent dosing. No remedial action possible.
High spin speed not reached.	A low spin speed is selected. ▸ The next time you run a wash cycle, set a higher spin speed.
	Reduced Ironing is activated. ▸ Select the programmes that are suitable for the type of fabric.
	Unbalance load detection system is using a reduced spin speed to eliminate an unbalance. ▸ Redistribute the laundry in the drum.

Fault	Cause and troubleshooting
High spin speed not reached.	**Note:** Where possible, mix large and small items in the drum. Different sized items of laundry distribute themselves better during the spin cycle. ▸ Start the **Spin** programme.
The spin programme does not start.	Drain pipe or water outlet hose is blocked. ▸ Clean the drain pipe and the water outlet hose.
	Drain pipe or water drain hose is caught or jammed. ▸ Ensure that the drain pipe and water drain hose are not kinked or trapped.
	The unbalanced load detection system has interrupted the spin cycle because the laundry is unevenly distributed. ▸ Redistribute the laundry in the drum. **Note:** Where possible, mix large and small items in the drum. Different sized items of laundry distribute themselves better during the spin cycle. ▸ Start the **Spin** programme.
Rushing, hissing noise.	Water is flushed under pressure into the detergent drawer. ▸ Not a fault – normal operating noise.
Longer, whirring noise before the start of the wash cycle or fabric softening.	Intelligent dosing system dispenses detergent or care products. ▸ Not a fault – normal operating noise.
Brief whirring noise after switching on the appliance.	Intelligent dosing system carries out a function test. ▸ Not a fault – normal operating noise.
Loud noises during the spin cycle.	Appliance is not correctly aligned. ▸ → *"Aligning the appliance", Page 15*
	The appliance feet are not fixed. ▸ Secure the appliance feet. → *"Aligning the appliance", Page 15*
	Transit bolts have not been removed. ▸ → *"Removing the transit bolts", Page 13*.
Banging noises, rattling in the drain pump.	Foreign bodies have got into the drain pump. ▸ → *"Cleaning the drain pump", Page 37*.
Slurping, rhythmical suction noise.	The drain pump is active, the detergent solution is pumped out. ▸ Not a fault – normal operating noise.

Fault	Cause and troubleshooting
Creasing.	The spin speed is too high. ▸ The next time you run a wash cycle, set a lower spin speed.
	The load is too large. ▸ The next time you run a wash cycle, reduce the amount of laundry being loaded.
	Unsuitable programme for the type of fabric. ▸ Select the programmes that are suitable for the type of fabric.
The spin result is not satisfactory. The laundry is too wet/too damp.	A low spin speed is selected. ▸ The next time you run a wash cycle, set a higher spin speed. ▸ Start the **Spin** programme.
	Reduced Ironing is activated. ▸ Select the programmes that are suitable for the type of fabric.
	Drain pipe or water outlet hose is blocked. ▸ Clean the drain pipe and the water outlet hose.
	Drain pipe or water drain hose is caught or jammed. ▸ Ensure that the drain pipe and water drain hose are not kinked or trapped.
	The unbalanced load detection system has interrupted the spin cycle because the laundry is unevenly distributed. ▸ Redistribute the laundry in the drum. **Note:** Where possible, mix large and small items in the drum. Different sized items of laundry distribute themselves better during the spin cycle. ▸ Start the **Spin** programme.
	Unbalance load detection system is using a reduced spin speed to eliminate an unbalance. ▸ Redistribute the laundry in the drum. **Note:** Where possible, mix large and small items in the drum. Different sized items of laundry distribute themselves better during the spin cycle. ▸ Start the **Spin** programme.
Detergent residue on the damp washing.	Detergents may contain water-insoluble substances that deposit on the laundry. ▸ Start the **Rinse** programme.

Fault	Cause and troubleshooting
Detergent residue on the damp washing.	Unsuitable detergent added to the dispenser of the intelligent dosing system. **1.** Check whether the detergent used is suitable. → *"Detergents and care products", Page 30* **2.** Drain the dispenser. → *"Cleaning the detergent drawer", Page 35* **3.** Clean the dispenser. **4.** Refill the dispenser. → *"Pouring liquid detergent and fabric softener into the dispensers", Page 33*
	Basic dosage not adjusted. ▸ If intelligent dosing is activated, reduce the basic dosage. → *Page 34*
Detergent residue on the dry laundry.	Detergents may contain water-insoluble substances that deposit on the laundry. ▸ Brush out the laundry after washing and drying.
	Unsuitable detergent added to the dispenser of the intelligent dosing system. **1.** Check whether the detergent used is suitable. → *"Detergents and care products", Page 30* **2.** Drain the dispenser. → *"Cleaning the detergent drawer", Page 35* **3.** Clean the dispenser. **4.** Refill the dispenser. → *"Pouring liquid detergent and fabric softener into the dispensers", Page 33*
	Basic dosage not adjusted. ▸ If intelligent dosing is activated, reduce the basic dosage. → *Page 34*
Insufficient cleaning.	Basic dosage not adjusted. ▸ If intelligent dosing is activated, adjust the basic dosage. → *Page 34*
	Detergent or care products have congealed in dispensers of the intelligent dosing system. **1.** Check whether the detergent used is suitable. → *"Detergents and care products", Page 30* **2.** Drain the dispenser. → *"Cleaning the detergent drawer", Page 35* **3.** Clean the dispenser. **4.** Refill the dispenser. → *"Pouring liquid detergent and fabric softener into the dispensers", Page 33*

Fault	Cause and troubleshooting
Insufficient cleaning.	Unsuitable detergent added to the dispenser of the intelligent dosing system. **1.** Check whether the detergent used is suitable. → *"Detergents and care products", Page 30* **2.** Drain the dispenser. → *"Cleaning the detergent drawer", Page 35* **3.** Clean the dispenser. **4.** Refill the dispenser. → *"Pouring liquid detergent and fabric softener into the dispensers", Page 33*
Water is leaking out at the water inlet hose.	Water inlet hose is not correctly/securely connected. **1.** Connect the water supply hose correctly. → *"Connecting the water inlet hose", Page 14* **2.** Tighten the screw connection.
Water is leaking out at the water outlet hose.	The water outlet hose is damaged. ▸ Replace the damaged water outlet hose.
	Water outlet hose is not connected correctly. ▸ Connect the water outlet hose correctly. → *"Water outlet connection types", Page 15*
Odours have formed in the appliance.	Humidity and detergent residue may promote the formation of bacteria. ▸ → *"Cleaning the drum", Page 35* ▸ If you are not using the appliance, leave the door and detergent drawer open so that residual water can evaporate.
Damp stains have formed on the fabrics after the end of the **Iron Assist** programme.	Water droplets from the drum or from the door have moistened the fabrics. The drops come from either condensed steam or the residual moisture from the previous wash programme. ▸ Iron the fabrics or hang them up to dry.
Water is leaking from below the door.	Dirt on the door or seal causes leaks. ▸ Clean the door and the seal.

18.1 Emergency release

Releasing the door

Requirement: The drain pump is empty. → *Page 37*

1. **ATTENTION!** Escaping water may cause material damage.
   - Do not open the door if you can see water through the glass.

   Pull the emergency release downwards with a tool and release.

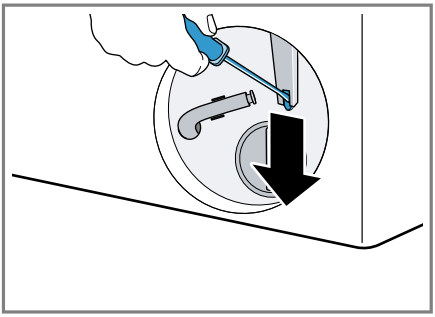

✔ The door lock is released.

2. Insert the maintenance flap and lock it into place.
3. Close the maintenance flap.

19 Transportation, storage and disposal

19.1 Removing the appliance

1. Turn off the tap.
2. Empty the water inlet hose.
3. Switch off the appliance.
   → *"Switching off the appliance", Page 32*
4. Unplug the appliance's mains plug.
5. Drain the water.
   → *"Cleaning the drain pump", Page 37*
6. Detach the hoses.
7. Empty the dispensers.

19.2 Inserting the transit bolts

Secure the appliance before transportation using transit bolts in order to prevent transport damage.

1. Use a screwdriver to remove the 4 cover caps.

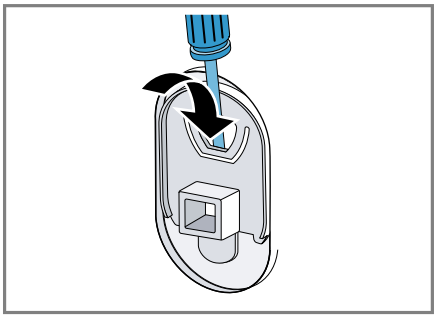

   Keep the cover caps.
2. Insert the 4 transit bolts.
   → *"Removing the transit bolts", Page 13*

19.3 Using the appliance again

- For further information, see
  → *"Installation and connection", Page 12* and
  → *"Starting an empty washing cycle", Page 16*.

19.4 Disposing of old appliance

Valuable raw materials can be re-used by recycling.

⚠ **WARNING**
Risk of harm to health!
Children can lock themselves in the appliance, thereby putting their lives at risk.

- ▸ Do not install the appliance behind a door as this may obstruct the appliance door or prevent it from opening.
- ▸ With redundant appliances, unplug the power cord. Then cut through the cord and damage the lock on the appliance door beyond repair so that the appliance door will no longer close.

1. Unplug the appliance from the mains.
2. Cut through the power cord.
3. Dispose of the appliance in an environmentally friendly manner.

   Information about current disposal methods are available from your specialist dealer or local authority.

This appliance is labelled in accordance with European Directive 2012/19/EU concerning used electrical and electronic appliances (waste electrical and electronic equipment - WEEE). The guideline determines the framework for the return and recycling of used appliances as applicable throughout the EU.

20 Customer Service

Function-relevant genuine spare parts according to the corresponding Ecodesign Order can be obtained from Customer Service for a period of at least 10 years from the date on which your appliance was placed on the market within the European Economic Area.

Note: Under the terms of the manufacturer's warranty the use of Customer Service is free of charge.

Detailed information on the warranty period and terms of warranty in your country is available from our after-sales service, your retailer or on our website.
If you contact Customer Service, you will require the product number (E-Nr.) and the production number (FD) of your appliance.
The contact details for Customer Service can be found in the enclosed Customer Service directory or on our website.

20.1 Product number (E-Nr.) and production number (FD)

You can find the product number (E-Nr.) and the production number (FD) on the appliance's rating plate. Depending on the model, the rating plate is located:

- On the inside of the door.
- On the inside of the maintenance flap.
- On the rear of the appliance.

Make a note of your appliance's details and the Customer Service telephone number to find them again quickly.

21 Consumption values

The following information is provided in accordance with the EU Ecodesign Regulation. The values given for programs other than the **Eco 40-60** are indicative only and were determined in accordance with the applicable standard EN60456. The automatic dosing function has been deactivated for this purpose.
Note on the comparison test: Deactivate the automatic dosing function unless this function is the object of the test.

Programme	Load (kg)	Programme duration (h:min)[1]	Energy consumption (kWh/cycle)[1]	Water consumption (l/cycle)[1]	Maximum temperature (°C) 5 mins[1]	Spin speed (rpm)[1]	Residual moisture (%)[1]
Eco 40-60[2]	9.0	3:48	0.870	75.0	38	1351	50.00
Eco 40-60[2]	4.5	2:54	0.370	40.0	27	1351	49.00
Eco 40-60[2]	2.5	2:22	0.180	30.0	23	1351	52.00
Cottons 20 °C	9.0	3:44	0.400	98.0	23	1400	50.00
Cottons 40 °C	9.0	3:44	1.290	98.0	44	1400	50.00
Cottons 60 °C	9.0	3:44	1.750	98.0	60	1400	50.00
Cottons 40 °C + Prewash	9.0	4:14	1.330	110.0	44	1400	50.00
Easy Care 40 °C	4.0	2:37	0.800	61.0	44	1200	30.00
Mixed Load 40 °C	4.0	1:05	0.640	44.0	42	1400	53.00
Wool 30 °C	2.0	0:41	0.300	48.0	29	800	26.00

[1] Due to the influence of water pressure, hardness and inlet temperature, ambient temperature, type, amount and soiling of laundry, detergent used, fluctuations in the power supply and the selected additional functions, the actual values may deviate from the stated values.
[2] Test programme in accordance with the EU Ecodesign Directive and the EU Energy Labelling Regulation with cold water (15 °C).

22 Technical data

Appliance height	84.8 cm
Appliance width	59.8 cm
Appliance depth	59.0 cm
Appliance depth with door closed	63.6 cm
Appliance depth with door open	107.3 cm
Weight	73.5 kg
Maximum load	9.0 kg
Mains voltage	220-240 V, 50-60 Hz
⊟ Minimum installation protection	10 A
Nominal power	2300 W
Power consumption	■ Off mode: 0.15 W ■ Left-on mode: 0.50 W
Water pressure	■ Minimum: 100 kPa (1 bar) ■ Maximum: 1000 kPa (10 bar)
Length of the water inlet hose	150 cm
Length of the water outlet hose	150 cm
Length of the power cord	210 cm

More information about your model can be found online at https://eprel.ec.europa.eu/qr/1372753[1]. This web address is linked to the official EU EPREL product database.

[1] Only applies to countries in the European Economic Area

Thank you for buying a Bosch Home Appliance!

Register your new device on MyBosch now and profit directly from:

- **Expert tips & tricks for your appliance**
- **Warranty extension options**
- **Discounts for accessories & spare-parts**
- **Digital manual and all appliance data at hand**
- **Easy access to Bosch Home Appliances Service**

Free and easy registration – also on mobile phones:
www.bosch-home.com/welcome

Looking for help? You'll find it here.

Expert advice for your Bosch home appliances, help with problems or a repair from Bosch experts.
Find out everything about the many ways Bosch can support you:
www.bosch-home.com/service
Contact data of all countries are listed in the attached service directory.

BSH Hausgeräte GmbH
Carl-Wery-Straße 34
81739 München, GERMANY
www.bosch-home.com

A Bosch Company

9001914623 (040115)
en

Valid within Great Britain:
Imported to Great Britain by
BSH Home Appliances Ltd.
Grand Union House
Old Wolverton Road
Wolverton, Milton Keynes
MK12 5PT
United Kingdom